Production and investigation of multiply charged metal clusters in a Penning trap*

L. Schweikhard [a], P. Beiersdorfer [b], W. Bell [a], G. Dietrich [c], S. Krückeberg [a], K. Lützenkirchen [c], B. Obst [a] and J. Ziegler [a]

[a] *Institut für Physik, Johannes Gutenberg-Universität, D-55099 Mainz, Germany*
[b] *Lawrence Livermore National Laboratory, Livermore, CA 94550, USA*
[c] *Institut für Kernchemie, Johannes Gutenberg-Universität, D-55099 Mainz, Germany*

Singly charged gold cluster ions from a laser-vaporization source are transferred into a Penning trap and subjected to electron bombardment. The charged reaction products are analyzed by time-of-flight mass spectrometry after axial ejection from the trap. They include singly charged cluster fragments, multiply charged clusters of the initial size and multiply charged cluster fragments. The multiply charged clusters are selected and further investigated by collision induced dissociation. Two types of reactions can be distinguished: Dissociation into several charged fragments and evaporation of neutrals. Several features of multiply charged clusters relevant for future investigations are reviewed.

1. Introduction

Multiply charged clusters have been observed for several decades and many species have been reported during the years, as documented in a recent review [1]. Exciting results are reported about fullerenes of high charge states after electron-impact ionization [2,3]. For metals, multiply charged clusters have been found by use of liquid metal ion sources [4], electron-impact ionization [5], laser ionization [6–8] and after the interaction with highly charged atomic ions [9].

In all these experiments multiply charged metal clusters have been investigated in beams. In contrast, ion trapping devices offer the possibility of extended reaction durations and multiple-MS events [10,11]. Thus, the ionization process can be studied starting from well-defined cluster sizes and charge states. Furthermore, the multiply charged clusters may be selected for subsequent investigations.

2. Experimental setup and procedure

The setup has been described in detail elsewhere [10]. Fig. 1 shows the major parts relevant for the current experiment. The cluster ions are produced by laser

* This work comprises part of the dissertation of J. Ziegler.

© J.C. Baltzer AG, Science Publishers

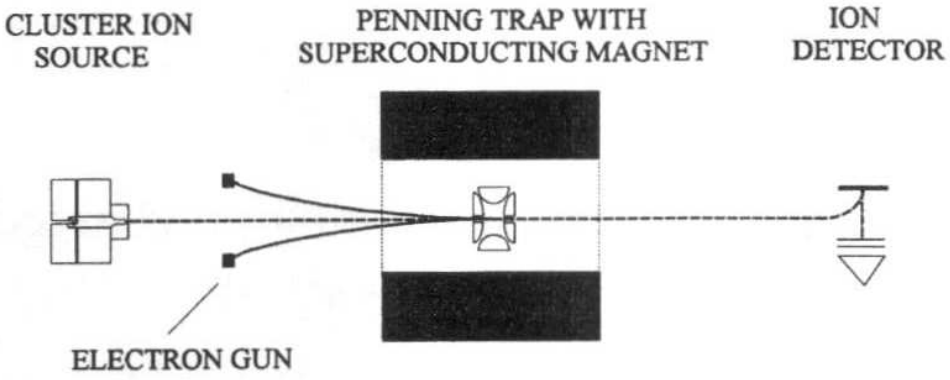

Fig. 1. Schematic overview of the experimental setup. The dashed and full lines indicate the paths of the cluster ion bunches and the electron beam, resp.

vaporization of a metal wire in a helium gas pulse which is subsequently expanded adiabatically into the vacuum [12]. They are then transferred by ion optical elements through several differential pumping states to the UHV section of a Penning trap where they are captured in flight [13]. Several cluster ion pulses may be accumulated in the trap [14]. The ion motion can be manipulated by appropriate rf excitation [15]. In particular, the cluster ions of interest may be centered in the middle of the trap by a combination of rf excitation and buffer gas cooling [16]. In addition, unwanted ions are radially ejected by excitation of their cyclotron motion. Both techniques take advantage of the fact that the frequencies of motion are depending on the ions' mass-over-charge ratio, i.e. the cluster size. After these preparatory measures the clusters are ready for various investigations probing their properties [11]. The reaction products (of collisions with inert neutrals, chemical reactions, laser excitations, electron impact, or combinations thereof) are axially ejected from the Penning trap and analyzed by time-of-flight mass spectrometry [10].

3. Electron bombardment of size selected gold cluster ions

The cluster ion source delivers neutral and singly charged species. Depending on the transfer potentials, either the positively or the negatively charged ones are captured and stored in the Penning trap. In order to go to higher charge states we have introduced a new method: First, cluster cations are accumulated and centered in the trap [14]. Afterwards this stored cluster ensemble is subjected to the beam of an electron gun. This gun consists of four rhenium filaments which are mounted just outside the cluster beam axis in the transfer section between the cluster ion source and the Penning trap (see fig. 1). The filaments are heated by an electrical current and give off electrons by thermionic emission. By use of appropriate gated potentials a pulsed electron beam is emitted. Due to the fringing fields of the Penning-trap magnet the electrons are directed towards the center of the trap where they interact with the stored cluster ions, similar as in an EBIT device [17].

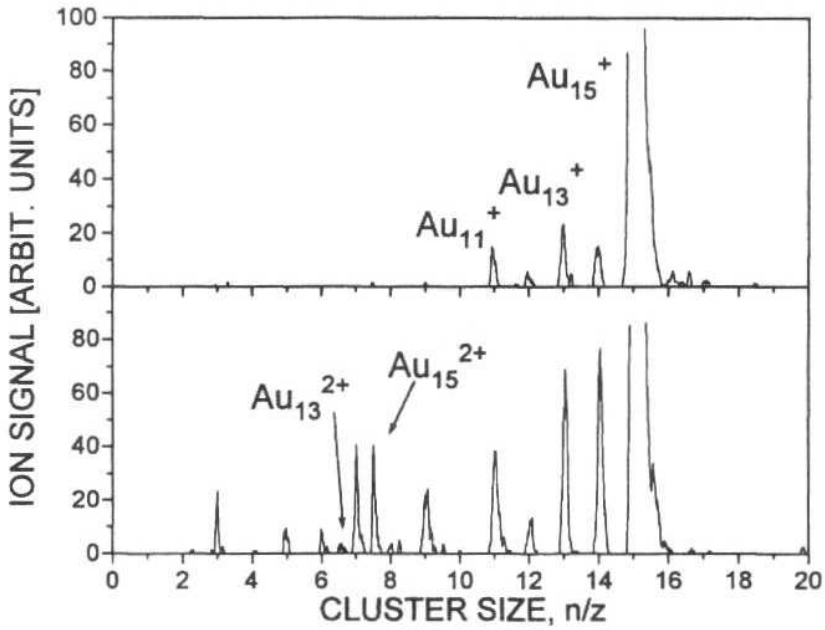

Fig. 2. Spectra of the cluster ion distribution after electron bombardment of mass selected Au_{15}^{+} clusters at electron energies of 11 eV (top) and 40 eV (bottom).

Fig. 2 shows mass spectra of a size-selected Au_{15}^{+} ensemble which have been exposed to the electron beam. For low electron energies (11 eV, fig. 2, top) the clusters evaporate neutrals as in collision induced dissociation (CID) [18]. At increased electron energy (e.g. 40 eV, fig. 2, bottom) the signal of doubly charged Au_{15}^{2+} appears between Au_7^{+} and Au_8^{+}. In addition, smaller doubly charged clusters are formed, e.g. Au_{13}^{2+} as indicated in fig. 2. Since the position of the cluster signal in the time-of-flight spectra depends on the mass-over-charge ratio only, even-sized doubly charged clusters (e.g. Au_{14}^{2+}) appear at the same position as singly charged ones of half the cluster size (Au_7^{+}). In the case of small clusters there is a significant overlap of the singly charged and the multiply charged electron-impact reaction products. For larger gold clusters much less singly charged fragments are observed and the signals of multiply charged clusters are well separated. As an example, fig. 3 shows the result of the bombardment of selected Au_{45}^{+} ions with 160-eV electrons. A number of doubly and triply charged clusters, Au_n^{z+}, $n \leqslant 45$, are produced. If several isotopes are involved, the n/z ambiguity may be resolved by high-resolution mass spectrometry, e.g. FT-ICR [19], or by subsequent investigations of the reaction products (see below). The lowest-size doubly and triply charged clusters that we have observed until now are Au_5^{2+} and Au_{16}^{3+}.

By measuring the number of fragments and doubly charged clusters as a function of electron energy (see fig. 4), the thresholds for dissociation and ionization of Au_{15}^{+} are determined. The kinetic energy of the electrons colliding with the stored clusters depends on their origin on the rhenium foil which is heated by an electrical current. The potential drop across the foil of about 1 eV is the largest source of uncertainty. The first fragment signals appear at electron energies of about 2 eV. For doubly charged Au_{15}^{2+} a threshold of around 14 eV is determined by linear extra-

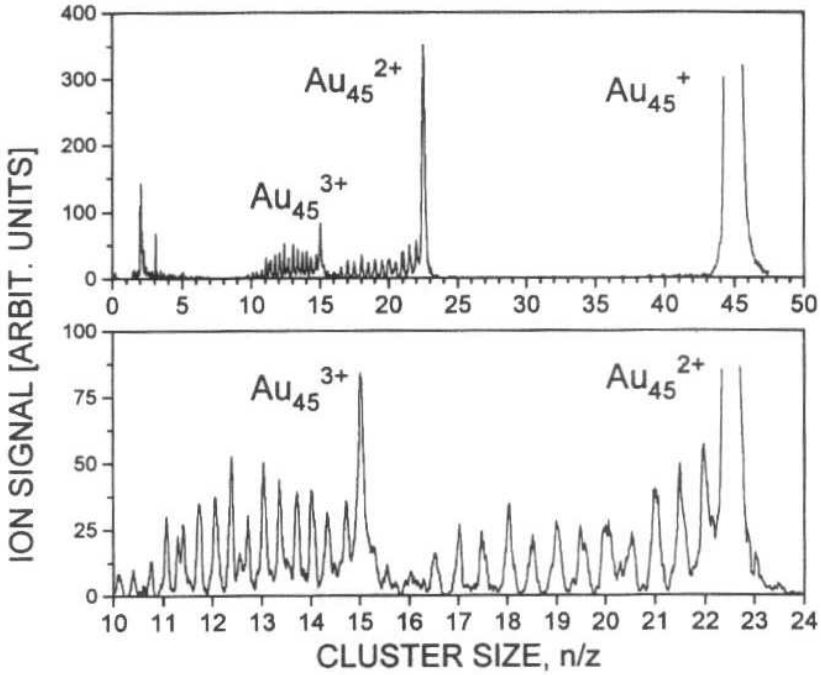

Fig. 3. Spectra of the cluster ion distribution after bombardment of mass selected Au_{45}^{+} by 160-eV electrons. Top: full spectrum. Bottom: expanded spectrum of Au_n^{2+} and Au_n^{3+} region.

polation of the yields at higher electron energies. For comparison, the literature values [20] of the ionization energies of the gold atom and Au^+ are 9.2 eV and 20.5 eV, resp. The ionization energies of a metal sphere are given by [21]

$$I = W_\infty + (z + 1/2)\frac{e^2}{4\pi \in_0 r_s n^{1/3}}, \tag{1}$$

where W_∞ is the work function of the bulk material, r_s its Wigner–Seitz radius and z denotes the charge state of the precursor. (Any electron spillout is neglected.) With $W_\infty = 5.1$ eV [20] and $r_s = 1.59 \times 10^{-10}$ m [22] the calculated value for Au_{15}^{+} is $I = 10.6$ eV. The observed threshold is several electronvolts higher than expected from the simple model.

Our current electron-cluster collision experiments all start with singly charged

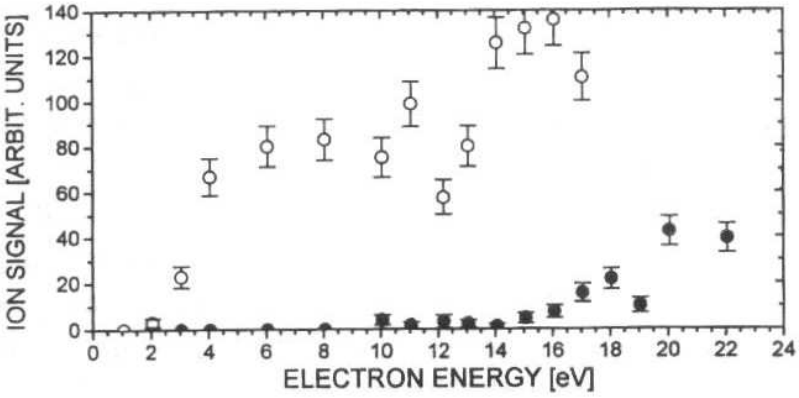

Fig. 4. Signal intensity of fragments Au_n^{+} ($n = 13$, 14, open circles) and doubly charged clusters (Au_{15}^{2+}, full circles) as a function of electron energy after electron bombardment of mass selected Au_{15}^{+}.

cluster ions. Au_n^{3+} production may either result from sequential ionization involving two distinct electrons hitting the cluster, or from the interaction with a single impact electron ejecting two cluster electrons at a time. One indication of the latter is the observation that for high electron energies the ratio of the number of triply charged to the number of doubly charged clusters is relatively large (as compared to the ratio of the Au_n^{2+} and Au_n^{+} numbers). Another indication for single-electron-events is the threshold energy for the production of doubly and triply charged clusters. For example, from eq. 1, 9.4 eV and 12.3 eV are expected for the sequential ionization $Au_{31}^{+} \rightarrow Au_{31}^{2+} \rightarrow Au_{31}^{3+}$. For the single-electron-event ionization the full energy of 9.4 eV + 12.3 eV = 21.7 eV has to be provided in one step. The observed threshold energy of Au_{31}^{3+} is about 24 eV. Therefore, Au_{31}^{3+} is likely to be produced via a single-electron-impact process.

4. Collision induced dissociation of Au_{15}^{2+}

Once multiply charged clusters have been produced in the Penning trap they may be stored for extended durations. (The longest storage time applied until now was 60 seconds.) During this period the clusters may be selected with respect to their size and charge state and subjected to further experiments. An example is given in fig. 5: CID of Au_{15}^{2+}. The top spectrum shows the signal of the size-selected precursor. At low excitation of the cyclotron motion (fig. 5, middle) the collisions with

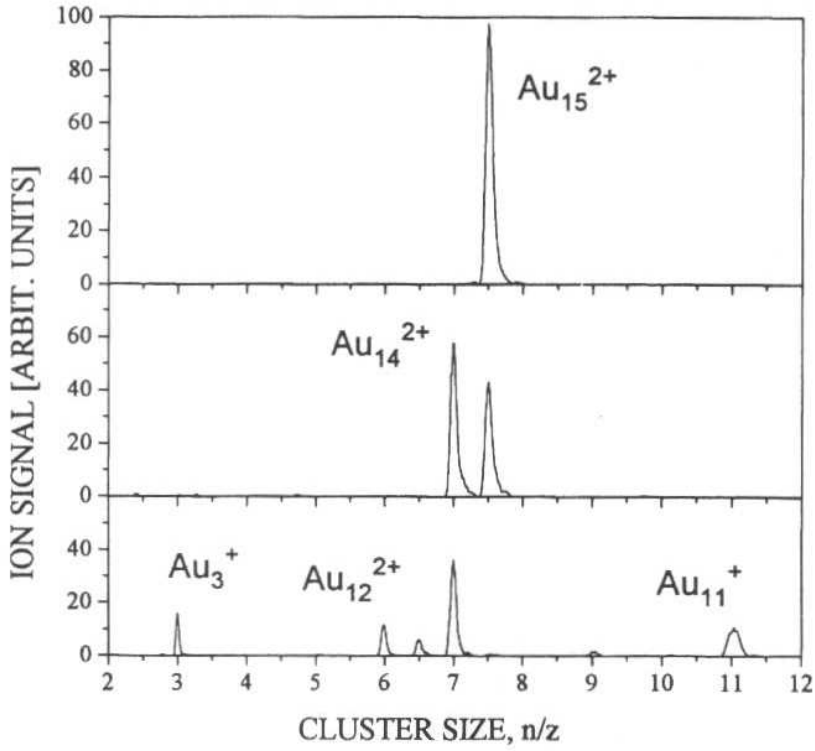

Fig. 5. Spectra demonstrating CID of Au_{15}^{2+} with argon atoms. Top: selection of Au_{15}^{2+} cluster ions. Middle: after moderate excitation of the clusters' cyclotron motion. Bottom: CID at higher excitation amplitude.

argon atoms result in an evaporation of neutral atoms from the cluster, which remains doubly charged. If the excitation amplitude is increased (fig. 5, bottom) signals of singly charged Au_3^+ and Au_{11}^+ show up. Au_3^+ is known to be a very stable species [18]. We have performed CID investigations on doubly charged gold clusters ranging from size $n = 7$ to $n = 35$. The data is currently being evaluated with respect to the fragmentation pattern and dissociation thresholds. Experiments on triply charged clusters have been started as well.

5. Discussion and outlook

We have presented the first experiments where metal clusters have been stored in a Penning trap, mass-selected and brought to higher charge states. To this end electron impact ionization has been employed. This ionization scheme is very versatile, since the electron energy can be varied over many orders of magnitude, from a few eV to several keV or more. However, the energy resolution of the electron beam is rather poor. It can be improved for future experiments, e.g. by use of indirect heating of the source foil. In addition to further ionization, electron-induced fragmentation of size-selected singly charged gold cluster ions has been observed. These data still have to be evaluated and compared to earlier CID and photofragmentation results.

There are several features that make multiply charged clusters particularly suited for fragmentation studies: Due to their higher charge state new decay channels open up and compete with the evaporation of neutral constituents. Furthermore, all charged fragmentation products remain stored in the Penning trap and are subsequently mass analyzed. For the current experiments time-of-flight spectra have been added on-line to increase the statistical significance of the data. By analyzing single-event spectra, however, coincidence experiments may be performed.

Multiply charged clusters are of special interest for CID experiments in ion-cyclotron-resonance traps: At a given magnetic field, B, and maximum allowed cyclotron radius, ρ (for confinement within the trap region), the (center-of-mass) collision energy for a cluster of n atoms, each of mass m and of charge q, colliding with a target atom of mass m_t is given by

$$E = \frac{q^2 B^2 \rho^2}{2nm} \frac{m_t}{nm + m_t} . \tag{2}$$

If a certain energy is required, eq. (2) gives the maximum cluster size, where CID can be observed (for single-collision conditions). For gold clusters colliding with argon atoms, $B = 5$ T, $\rho = 2$ cm and assuming $E = 2$ eV, the maximum CID cluster sizes are $n = 15$ for singly, $n = 31$ for doubly, and $n = 47$ for triply charged clusters.

The availability of new charge states adds another dimension to cluster investigations. One important question to be addressed is the influence of the geometric

versus that of the electronic structure of clusters on their structure and stability. The CID investigations on small Au_n^+, e.g., have shown that the odd-size clusters are more stable than the even-size ones [18]. In contrast, for CID on Au_n^{2+} the stability relation is reversed. It can be concluded that the electronic structure plays an important role.

Future dissociation experiments may include the application of lasers for the excitation of stored multiply charged clusters. Since both the excitation energies and times are well defined, measurements of delayed photofragmentation in the millisecond region should be possible, as recently observed for singly charged metal clusters [23]. The time constant of delayed fragmentation may then be studied as a function of charge state and fragmentation channel.

In addition to electron-impact ionization and fragmentation there is another electron-cluster interaction that can be studied, namely recombination. Calculations [24] indicate that this process may be enhanced if collective electron modes are excited simultaneously. Starting from multiply charged ions the recombination products remain charged and therefore stay trapped and available for mass analysis.

Acknowledgements

We thank all former and current members of the Mainz cluster crew, and in particular Prof. H.-J. Kluge (GSI, Darmstadt) for his continued interest. The work was supported by the Deutsche Forschungsgemeinschaft (Schw 401/7-3), the Materialwissenschaftliches Forschungszentrum Mainz and a NATO Collaborative Research Grant (CRG-930125).

References

[1] O. Echt and T.D. Märk, Multiply charged clusters, in: *Springer Series in Chemical Physics*, Vol. 56, ed. H. Haberland (1994) p. 183.
[2] R. Völpel G. Hofmann, M. Streidl, M. Stenke, M. Schlapp, R. Trassl and E. Salzborn, Phys. Rev. Lett. 71 (1993) 3439.
[3] S. Matt et al., these proceedings, Hyp. Int. 99 (1996) 175.
[4] W.A. Saunders and S. Fedrigo, Chem. Phys. Lett. 156 (1989) 14.
[5] W. Schulze, B. Winter, J. Urban and I. Goldenfeld, Z. Phys. D4 (1987) 379.
[6] C. Bréchignac, Ph. Cahuzac, F. Carlier and J. Leygnier, Phys. Rev. Lett. 63 (1989) 1368.
[7] O. Kandler, K. Athanassenas, O. Echt, D. Kreisle, T. Leisner and E. Recknagel, Z. Phys. D19 (1991) 153.
[8] U. Näher, H. Göhlich, T. Lange and T.P. Martin, Phys. Rev. Lett. 68 (1992) 3416.
[9] F. Chandezon, C. Guet, B.A. Huber, D. Jalabert, M. Maurel, E. Monnand, C. Ristori and J.C. Rocco, Phys. Rev. Lett. 74 (1995) 3784.
[10] St. Becker, K. Dasgupta, G. Dietrich, H.-J. Kluge, S. Kuznetsov, M. Lindinger, K. Lützenkirchen, L. Schweikhard and J. Ziegler, Rev. Sci. Instr. 66 (1995) 4902.

[11] L. Schweikhard, St. Becker, K. Dasgupta, G. Dietrich, H.-J. Kluge, D. Kreisle, S. Krückeberg, S. Kuznetsov, M. Lindinger, K. Lützenkirchen, B. Obst, H. Weidele, C. Walther and J. Ziegler, Phys. Scripta T59 (1995) 236.
[12] H. Weidele, U. Frenzel, T. Leisner and D. Kreisle, Z. Phys. D20 (1991) 425.
[13] H. Schnatz, G. Bollen, P. Dabkievicz, P. Egelhof, F. Kern, H. Kalinowsky, L. Schweikhard, H. Stolzenberg and H.-J. Kluge, The ISOLDE Collaboration, Nucl. Instr. Meth. A251 (1986) 17.
[14] H.-U. Hasse, St. Becker, G. Dietrich, N. Klisch, H.-J. Kluge, M. Lindinger, K. Lützenkirchen, L. Schweikhard and J. Ziegler, Int. J. Mass Spectrom. Ion Processes 132 (1994) 181.
[15] L. Schweikhard and A.G. Marshall, J. Am. Soc. Mass Spectrom. 4 (1993) 433.
[16] G. Savard, St. Becker, G. Bollen, H.-J. Kluge, R.B. Moore, L. Schweikhard, H. Stolzenberg and U. Wiess, Phys. Lett. A158 (1991) 247.
[17] P. Beiersdorfer et al., these proceedings, Hyp. Int. 99 (1996) 203.
[18] St. Becker, G. Dietrich, H.-U. Hasse, N. Klisch, H.-J. Kluge, D. Kreisle, S. Krückeberg, M. Lindinger, K. Lützenkirchen, L. Schweikhard, H. Weidele and J. Ziegler, Z. Phys. D30 (1994) 341.
[19] A.G. Marshall and L. Schweikhard, Int. J. Mass Spectrom. Ion Processes 118/119 (1992) 37.
[20] D. R. Lide (ed.), *CRC Handbook of Chemistry and Physics*, 71st Ed. (CRC Press, 1990).
[21] W.A. de Heer and P. Milani, Phys. Rev. Lett. 65 (1990) 3356.
[22] N.W. Ashcroft and N.D. Mermin, *Solid State Physics* (Philadelphia, 1976).
[23] M. Lindinger, Ph.D. Thesis, Mainz (1995).
[24] A.V. Solov'yov, *5th EPS Conf. on Atomic and Molecular Physics*, ed. R.C. Thompson, Edinburgh, UK (1995) p. 686.