scattering cross-sections approximate dust masses of 10^{-6} solar masses ($10^{-6}\,M_\odot$) for BD+31°643, and $10^{-8}\,M_\odot$ for β Pic (assuming a particle density $\rho = 1\,\mathrm{g\,cm^{-3}}$ and an albedo $A = 0.1$). These must be lower limits because we have not measured scattered light within 5 arcsec radius of either star, nor have we considered the likely presence of larger, unseen bodies.

In the absence of a significant gaseous component to the disk, forces such as Poynting–Robertson (PR) drag and radiation pressure will deplete the small dust surrounding BD+31°643 on short timescales. For a particle radius $a = 0.1\,\mu\mathrm{m}$, density $\rho = 1\,\mathrm{g\,cm^{-3}}$, distance from the star $r = 2,000$ AU and luminosity $L_* = 1,660\,L_\odot$ (where $L_\odot$ is the solar luminosity), the PR decay time is $t_{\mathrm{PR}} = 0.2 \times 10^6$ yr. Even more significant is radiation pressure, which will blow out dust in an optically thin system if the ratio of radiation pressure to central gravity is $\beta > 1$. For a given particle size and composition, β scales very roughly as the ratio of stellar luminosity to stellar mass and is 40 times larger for BD+31°643 than for β Pic. Extrapolating from the β values calculated for various grain sizes and compositions around β Pic[23], we estimate that ~0.1-μm grains at 2,000 AU from BD+31°643 will be blown out to 6,000 AU on 10^3-yr timescales. The dominance of the radiation force over stellar gravity implies that the observed, disk-like structure is not centripetally supported and is therefore fundamentally different from the 10–100 AU-scale accretion disks detected around pre-main-sequence stars[24].

The age of BD+31°643 is probably greater than the 6×10^5 yr required for a BV5 star to reach the main sequence[25], but less than the $(5\text{–}7) \times 10^6$ yr age of the IC348 cluster[26]. The fact that the lifetime of 0.1-μm dust is orders of magnitude shorter than the age of the star argues that the dust within 6,000 AU is replenished. Erosion of larger bodies has been suggested as a source of replenishment for the β Pic disk[8]; adopting this suggestion, the inclination distribution of dust observed around BD+31°643 may reflect the inclination distribution of unseen parent objects. These parent bodies have either been partially cleared, or were prevented from forming near the stars due to tidal interactions, PR drag, collisions or other destructive forces. They are present at $\sim 10^3$ AU radii where they continue to replenish 0.1-μm-sized dust grains. If we assume an age of $\sim 10^6$ yr and a dust lifetime of $\sim 10^3$ yr, then the disk has been replenished 1,000 times over. Using the observed disk mass of $\sim 10^{-6}\,M_\odot$, we estimate that the mass of precursor objects is $\sim 10^{-3}\,M_\odot$ (a lower limit). The parental dust cloud (that is, the larger-scale IC348 nebulosity) still surrounds the disk and binary, and the entire system may represent an intermediate stage of evolution between embedded protostars (for example, the protobinary system IRAS16293 − 2422[27]) and isolated, main-sequence stars such as β Pic.

Additional observations are required to test the disk interpretation of the nebulosity surrounding BD+31°643, to measure the gas content associated with the dust, and to clarify the relationship of the disk-like structure with the surrounding dust cloud. If its disk nature is confirmed, BD+31°643 represents an exceptional opportunity to examine the evolution and stability of planetesimals located around a binary stellar system. □

Received 20 May 1996; accepted 10 January 1997.

1. Weidenschilling, S. J. & Cuzzi, J. N. *Protostars and Planets III* (eds Levy E. H. & Lunine, J. I.) 1031–1060 (Univ. Arizona Press, Tucson, 1993).
2. Nakano, T. *Mon. Not. R. Astron. Soc.* **230,** 551–571 (1988).
3. Backman, D. E. & Paresce, F. in *Protostars and Planets III* (eds Levy, E. H. & Lunine, J. I.) 1253–1304 (Univ. Arizona Press, Tucson, 1993).
4. Smith, B. A. & Terrile, R. J. *Science* **226,** 1421–1424 (1984).
5. Smith, B. A. & Terrile, R. J. *Bull. Am. Astron. Soc.* **19,** 829 (1987).
6. Kalas, P. & Jewitt, D. *Astron. J.* **110,** 794–804 (1995).
7. Lagage, P. O. & Pantin, E. *Nature* **369,** 628–630 (1994).
8. Artymowicz, P. in *Proc. IAP Meeting on Circumstellar Dust Disks and Planet Formation* (eds Ferlet, R. & Vidal-Madjar, A.) 47–65 (Editions Frontieres, Paris, 1994).
9. Kalas, P. & Jewitt, D. *Bull. Am. Astron. Soc.* **25,** 1353 (1993).
10. Hubble, E. *Astrophys. J.* **56,** 400–438 (1922).
11. Witt, A. N. & Schild, R. E. *Astrophys. J. Suppl. Ser.* **62,** 839–852 (1986).
12. Zinnecker, H., McCaughrean, M. J. & Wilking, B. A. in *Protostars and Planets III* (eds Levy, E. H. & Lunine, J. I.) 429–495 (Univ. Arizona Press, Tucson, 1993).
13. Eggen, O. J. *Astron. J.* **68,** 483–514 (1963).
14. Edwards, S., Ray, T. & Mundt, R. in *Protostars and Planets III* (eds Levy, E. H. & Lunine, J. I.) 567–602 (Univ. Arizona Press, Tucson, 1993).
15. Staude, H. J. & Elsasser, H. *Astron. Astrophys. Rev.* **5,** 165–238 (1993).
16. Snow, T. P., Hanson, M. M., Seab, C. G. & Saken, J. M. *Astrophys. J.* **420,** 632–642 (1994).
17. Kalas, P. & Jewitt, D. *Astron. J.* **111,** 1347–1355 (1996).
18. Lamy, P. L. & Perrin, J.-M. *Astron. Astrophys.* **163,** 269–286 (1986).
19. Artymowicz, P. & Lubow, S. H. *Astrophys. J.* **421,** 651–667 (1994).
20. Strom, S. E., Strom, K. M. & Carrasco, L. *Publ. Astron. Soc. Pacif.* **86,** 798–805 (1974).
21. Fernie, J. D. *Publ. Astron. Soc. Pacif.* **95,** 782–785 (1983).
22. Paresce, F. & Burrows, C. *Astrophys. J.* **319,** L23–L25 (1987).
23. Artymowicz, P. *Astrophys. J.* **335,** L79–L82 (1988).
24. Basri, G. & Bertout, C. in *Protostars and Planets III* (eds Levy, E. H. & Lunine, J. I.) 543–566 (Univ. Arizona Press, Tucson, 1993).
25. Iben, I. *Astrophys. J.* **141,** 993–1014 (1965).
26. Lada, E. A. & Lada, C. J. *Astron. J.* **109,** 1682–1696 (1995).
27. Walker, C. K., Carlstrom, J. E. & Bieging, J. H. *Astrophys. J.* **402,** 655–666 (1993).
28. Underhill, A. & Doazon, V. *B Stars With and Without Emission Lines* (SP-456, NASA, Washington DC, 1982).
29. Schmidt-Kaler, Th. *Landolt-Bornstein, New Series, Group VI* (Springer, Berlin, 1982).
30. Racine, R. *Astron. J.* **73,** 233–245 (1968).

Acknowledgements. We thank G. Herbig and D. Backman for comments. The observations were made possible with the assistance of K. Jim, J. Gradie, B. Zuckerman and E. Becklin. P.K. was supported by the NASA Graduate Student Researchers Program; D.J. was funded by the NASA Origins of Solar Systems program.

Correspondence should be addressed to P.K.

High-energy ions produced in explosions of superheated atomic clusters

T. Ditmire, J. W. G. Tisch, E. Springate, M. B. Mason, N. Hay, R. A. Smith, J. Marangos & M. H. R. Hutchinson

Blackett Laboratory, Prince Consort Road, Imperial College of Science, Technology and Medicine, London SW7 2BZ, UK

Efficient conversion of electromagnetic energy to particle energy is of fundamental importance in many areas of physics. A promising avenue for producing matter with unprecedented energy densities is by heating atomic clusters, an intermediate form of matter between molecules and solids[1], with high-intensity, ultra-short light pulses[2–4]. Studies of noble-gas clusters heated with high-intensity ($>10^{16}\,\mathrm{W\,cm^{-2}}$) laser pulses indicate that a highly ionized, very high temperature micro-plasma is produced. The explosion of these superheated clusters ejects ions with substantial kinetic energy[3–5]. Here we report the direct measurement of the ion energy distributions resulting from these explosions. We find, in the case of laser-heated xenon clusters, that such explosions produce xenon ions with kinetic energies up to 1 MeV. This energy is four orders of magnitude higher than that achieved in the Coulomb explosion of small molecules[6], indicating a fundamental difference in the nature of intense laser–matter interactions between molecules and clusters. Moreover, it demonstrates that access to an extremely high temperature state of matter is now possible with small-scale lasers.

Such experiments have become possible owing to recently developed high peak power, femtosecond lasers which are based on chirped pulse amplification and are capable of producing focused light intensity up to 10^{14}–$10^{19}\,\mathrm{W\,cm^{-2}}$ (ref. 7). These high intensities have been used to study the production of highly charged ions from multi-photon ionization of individual atoms[8], and the optical ionization of small (2–10 atom) molecules, in which the resulting Coulomb explosion produces ions with kinetic energy of up to ~10–100 eV (ref. 9). At the same time, the production of hot (~1-keV), high-density plasmas by the intense irradiation of a solid has also been the subject of detailed studies[10]. Though the nature of the interaction of intense light with single atoms and bulk solid targets has been the subject of extensive investigation over the past decade,

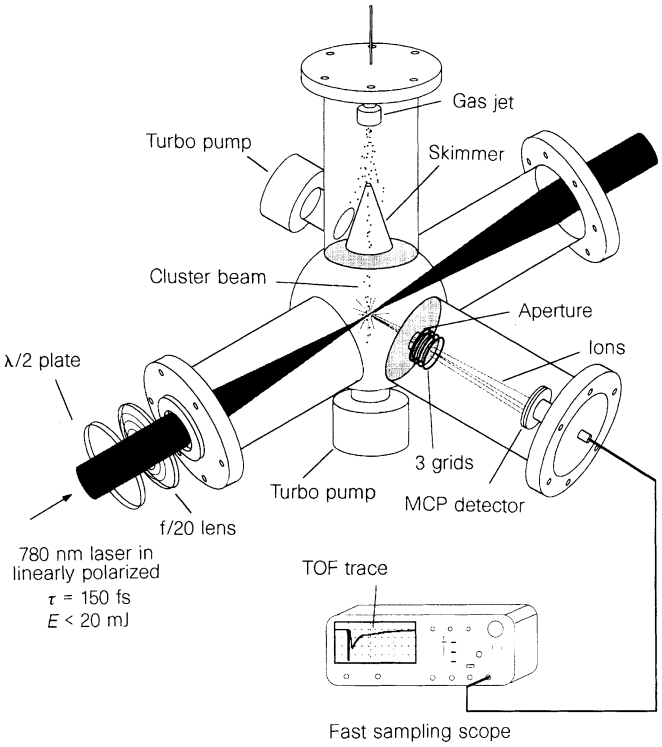

Figure 1 Experimental configuration for measuring ion energies of exploding clusters. The energies of the ions produced by the interaction of the laser pulse with the clusters were determined by the flight time of the ions in a field-free drift tube. The charge-state distribution of the ions as a function of ion kinetic energy was measured by varying the voltage on the middle grid of three closely spaced grids (~3-mm spacing) placed along the drift tube (TOF, time-of-flight; MCP, microchannel plate detector; E, laser energy; τ, laser pulse width).

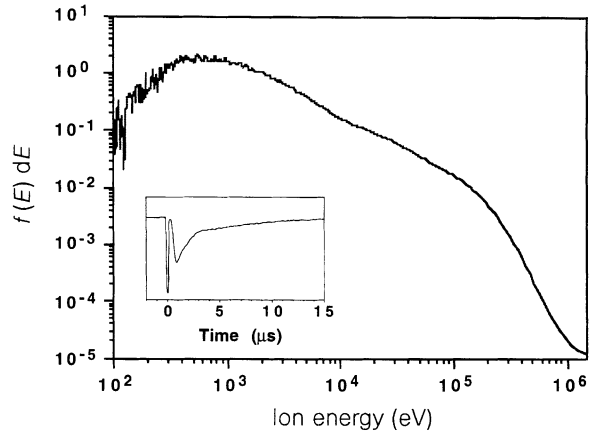

Figure 2 Ion energy spectrum from 65-Å (~2,500-atom) Xe clusters irradiated by a peak intensity of 2×10^{16} W cm^{-2}, derived from the ion TOF trace shown as an inset. (The first peak in the TOF trace corresponds to fast (>2-keV) electrons; the feature at later times corresponds to the ions. Note that electrons with energy <2 keV do not reach the MCP detector as the front plate is charged to −2,000 V).

only recently have the dynamics of intense laser interactions with the intermediate state of matter, clusters, come under study.

Preliminary experiments on high-intensity laser–cluster interactions have suggested that this interaction is much more energetic than laser/isolated-atom interactions[2–4,11,12], and may be even more energetic than laser–solid interactions[13]. Recent experiments examining the X-ray emission from plasmas formed by the irradiation of noble-gas (Ar, Kr and Xe) clusters have indicated that, because of the enhancement of laser-driven collisional excitation within the cluster, efficient production of X-rays is possible[2,3,11]. High-energy Coulomb explosion of small clusters ionized by femtosecond pulses has also been observed[12]. The ion energies measured in these experiments ranged from 500 to 1,000 eV for ions with charges as high as 8+.

In an intensely irradiated cluster, optically and collisionally ionized electrons undergo rapid collisional heating for the short time (<1 ps) before the cluster disassembles in the laser field[5]. Our recent studies[4] of the electron energy spectra produced by the high-intensity irradiation of large Xe clusters with a 150-fs laser pulse indicated that collisional heating within the cluster can produce electrons with energy of up to 3 keV, an energy much higher than that typical of solid-target plasmas[14]. A sharp peak in the measured electron energy spectrum suggested that the cluster micro-plasma exhibited a resonance in the heating by the laser pulse similar to the giant resonance seen in metallic clusters[15]. A small amount of cluster expansion during the laser pulse lowers the electron density to bring the near-infrared laser light into resonance with the free-electron plasma frequency in the cluster. This resonance greatly increases the laser electric field density within the cluster, and the laser absorption rate is enhanced, rapidly heating the electrons on a very fast (<10-fs) timescale to a highly non-equilibrium superheated state (with mean energies of many keV). Charge separation of the hot electrons inevitably leads to a very fast expansion of the cluster ions. This process is fundamentally different from low-intensity photo-fragmentation of clusters[16] and far more energetic than the Coulomb explosion of small molecules[9].

To search for this ion explosion, our experiment (Fig. 1) focused a high-power, 150-fs pulse from a Ti:sapphire laser[17] into a time-of-flight chamber to a peak intensity of up to 2×10^{16} W cm^{-2} where it intercepted a low-density beam of Xe clusters. The time-of-flight trace directly yields an energy distribution function for the ions. In Fig. 2, we show the energy spectrum of Xe ions produced from the irradiation of 65-Å Xe clusters. This energy spectrum is radically different from previously observed ion energy spectra from the intense-field fragmentation of molecules or small clusters. Most surprising is the production of significant numbers of very hot ions with energies up to 1 MeV. This energy is four orders of magnitude higher than has previously been observed in the Coulomb explosion of molecules[6] and about 1,000 times higher than the energy of Ar ions ejected in the Coulomb explosion of small clusters irradiated at lower intensity[12]. The average ion energy of the distribution shown in Fig. 2, defined as $\langle E \rangle = \int Ef(E)\mathrm{d}E / \int f(E)\mathrm{d}E$, is 45 ± 5 keV. Thus the average laser energy deposited in the cluster per ion is substantial. Furthermore, we find that the ions are ejected with equal energy in all directions with respect to the laser polarization, an artefact of the spherical geometry of the exploding cluster[5]. Again, this is in stark contrast to the Coulomb explosion of small linear molecules[18].

By varying the gas-jet backing pressure we controlled the average size of clusters with which the laser interacts. In general, we find that both the maximum and the average ion kinetic energy increase with increasing cluster size, though both vary slowly with changing cluster size. Even in Xe clusters with as few as ~400 atoms (diameter of ~35 Å) the maximum observed ion energy is 250 keV and the average ion energy is 28 keV. However, at lower backing pressure, below ~1 bar, we observe no hot ions. Rayleigh-scattering measurements[4] in the jet indicate that large clusters (>100 atoms) form only with backing pressure >1 bar. This transition to hot-ion production with large clusters points to an important change in the dynamics of the cluster expansion between small and large clusters. The slow decrease in ion energy with decreasing cluster size is related to the fact that small clusters disassemble faster in the laser pulse[5]. As a consequence, the electrons are heated to a lesser degree

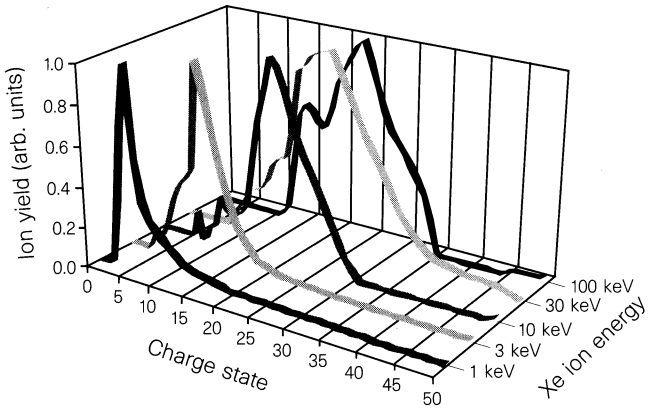

Figure 3 Measured charge-state distribution of 65-Å Xe clusters irradiated by a peak laser intensity of 2×10^{16} W cm^{-2} for ion kinetic energies of 1, 3, 10, 30 and 100 keV.

by the laser, and the cluster micro-plasma explodes with a lower velocity.

Another striking feature of the ions produced in the laser–cluster interaction is the ionization to very high charge states (a phenomenon previously seen in experiments[2,3,12,19]). Measured charge-state distributions of Xe ions are shown in Fig. 3 for five different ion energies. In general the average charge state of the ions increases as the ion energy increases. For the high-energy ions, the peak of the charge-state distribution is around a charge state of 18+ to 20+ though a significant number of ions with charge state between 30+ and 40+ are observed. These are charge states far above the maximum that can be produced by simple field ionization of the Xe atoms[8]. In the cluster the high-temperature electrons created through laser-driven heating rapidly strip the ions by collisional ionization.

The observed charge states and energies of the ions are very much like those observed in the hot-electron-driven expansion of a laser-heated, solid target plasma[20,21]. These high ion energies are the result of fast electron charge separation and rapid hydrodynamic expansion of the plasma into vacuum[22]. Previous studies of laser/solid-target interaction with intensities similar to those used in our experiment indicate that the characteristic ion energies from high-Z targets are[23] 100–200 keV. The close similarity between our data and the hot-ion data of high-energy, solid-target experiments indicates that, for clusters even as small as a few hundred atoms, the dynamics of the expansion appear to deviate from molecular behaviour and approach that of solid-target, hot-electron-driven expansions.

The efficiency with which the absorbed laser energy is converted to ion energy in the cluster explosion is remarkable. Though the majority of the laser energy is deposited into the electrons within the cluster during the laser pulse, the charge separation of these hot electrons accelerates the ions radially, and, as a result, after the explosion of the cluster most (>90%) of the laser energy deposited in the cluster is transferred to the ions. Both electrons and ions ultimately reach a velocity given by the sound speed of the cluster plasma, $c_s = \sqrt{ZkT_e/m_i}$ (where kT_e is the electron thermal energy and m_i is the ion mass)[22], but most of the resulting kinetic energy is contained in the ions owing to their much greater mass. We expect that $\frac{1}{2}m_{Xe}c_s^2$ will be ~50 keV (for $kT_e \approx 2.5$ keV (ref. 4) and Xe ions with mass m_{Xe} and $Z \approx 20+$), in good agreement with our observed average Xe ion energies.

Our ion energy and charge-state measurements indicate that in a gaseous medium of clusters, the average energy deposited per atom may be as high as many tens of keV. Thus, in a gas of clusters with a modest average atomic density of ~1 atm, a density typical near the output of most cluster-forming gas jets[24], virtually all of the laser energy from a short pulse laser could be deposited in the gas within a focal volume, a prediction confirmed by recent laser energy absorption measurements in clustering gas jets[25]. But unlike solid targets (in which much of the deposited laser energy is rapidly conducted into the cold, bulk solid[10,26]), most of the laser energy deposited in the cluster drives the ion explosion.

This result raises the interesting possibility that moderate-density plasmas with very high ion temperatures could be created from the intense illumination of a gas of clusters. Because each cluster in the medium explodes isotropically, the plasma that results after all the clusters in the gas have exploded will contain hot ions with an isotropic velocity distribution. Such novel, high-ion-temperature plasmas may find application in a host of experiments[27]. For example, a plasma formed from the explosion of deuterium and tritium clusters may make possible table-top fusion experiments[28]. Even a small laser (such as the one used in our experiments which delivers ~100 mJ) could be used to produce a plasma, in a clustering DT gas jet, with an ion temperature of ~10 keV and a density of ~10^{19} cm^{-3} over an appreciable focal volume (~10^{-5} cm^3). Given that the expected disassembly time of this plasma would be[5] of the order of 100 ps, such a plasma would exhibit an easily observable fusion yield of roughly 10^6–10^7 neutrons per shot[29]. □

Received 26 September 1996; accepted 20 January 1997.

1. Castleman, A. W. & Keesee, R. G. Gas-phase clusters: spanning the states of matter. *Science* **241,** 36–42 (1988).
2. McPherson, A., Thompson, B. D., Borisov, A. B., Boyer, K. & Rhodes, C. K. Multiphoton-induced X-ray emission at 4–5 keV from Xe atoms with multiple core vacancies. *Nature* **370,** 631–634 (1994).
3. Ditmire, T., Donnelly, T., Falcone, R. W. & Perry, M. D. Strong X-ray emission from high temperature plasmas produced by intense irradiation of clusters. *Phys. Rev. Lett.* **75,** 3122–3125 (1995).
4. Shao, Y. L. *et al.* Multi-keV Electron generation in the interaction of intense laser pulses with Xe clusters. *Phys. Rev. Lett.* **77,** 3343–3346 (1996).
5. Ditmire, T., Donnelly, T., Rubenchik, A. M., Falcone, R. W. & Perry, M. D. The interaction of intense laser pulses with atomic clusters. *Phys. Rev. A* **53,** 3379–3402 (1996).
6. Cornaggia, C., Schmidt, M. & Normand, D. Coulomb explosion of CO_2 in an intense femtosecond laser field. *J. Phys. B.* **27,** L123–L130 (1994).
7. Perry, M. D. & Mourou, G. Terawatt to petawatt subpicosecond lasers. *Science* **264,** 917–924 (1994).
8. Augst, S., Meyerhofer, D. D., Strickland, D. & Chin, S. L. Laser ionization of noble gases by coulomb-barrier suppression. *J. Opt. Soc. B* **8,** 858–867 (1991).
9. Codling, K. & Frasinski, L. J. Coulomb explosion of simple molecules in intense laser fields. *Contemp. Phys.* **35,** 243–255 (1994).
10. Murnane, M. M., Kapteyn, H. C., Rosen, M. D. & Falcone, R. W. Ultrafast X-ray pulses from laser-produced plasmas. *Science* **251,** 531–536 (1991).
11. McPherson, A. *et al.* Multiphoton induced X-ray emission from Kr clusters on M-shell and L-shell transitions. *Phys. Rev. Lett.* **72,** 1810–1813 (1994).
12. Purnell, J., Snyder, E. M., Wei, S. & Castleman, A. W. Ultrafast laser-induced coulomb explosion of clusters with high charge states. *Chem. Phys. Lett.* **229,** 333–339 (1994).
13. Gordon, S. P., Donnelly, T., Sullivan, A., Hamster, H. & Falcone, R. W. X-Rays from microstructured targets heated by femtosecond lasers. *Opt. Lett.* **19,** 484–486 (1994).
14. Shepherd, R. *et al.* Characterization of short pulse laser-produced plasmas. *J. Quant. Spectrosc. Radiat. Transfer* **51,** 357–360 (1994).
15. Brégnacac, J. & Connerade, J. P. The giant resonance in atoms and clusters. *J. Phys. B.* **27,** 3795–3828 (1994).
16. Nagata, T., Hirokawa, J. & Kondo, T. Photodissociation of Ar_2^+ cluster ions. *Chem. Phys. Lett.* **176,** 526–528 (1991).
17. Fraser, D. J. & Hutchinson, M. H. R. High intensity titanium-doped sapphire laser. *J. Mod. Opt.* **43,** 1055–1062 (1996).
18. Strickland, D. T., Beaudoin, Y., Dietrich, P. & Corkum, P. B. Optical studies of intertially confined molecular iodine ions. *Phys. Rev. Lett.* **68,** 2755–2758 (1992).
19. Snyder, E. M., Buzza, S. A. & Castleman, A. W. Intense field-matter interactions: multiple ionization of clusters. *Phys. Rev. Lett.* **77,** 3347–3350 (1996).
20. Gitomer, S. J. *et al.* Fast ions and hot electrons in the laser-plasma interaction. *Phys. Fluids* **29,** 2679–2688 (1986).
21. Decoste, R. & Ripin, B. H. High-energy expansion in laser plasma interactions. *Phys. Rev. Lett.* **40,** 34–37 (1978).
22. Wickens, L. M. & Allen, J. E. Free expansion of a plasma with two electron temperatures. *J. Plasma Phys.* **22,** 167–185 (1979).
23. Meyerhofer, D. D. *et al.* Resonance absorption in high-intensity contrast, picosecond laser-plasma interactions. *Phys. Fluids B* **5,** 2584–2588 (1993).
24. Perry, M. D., Darrow, C., Coverdale, C. & Crane, J. K. Measurement of the local electron density by means of stimulated Raman scattering in a laser produced gas-jet plasma. *Opt. Lett.* **17,** 523–535 (1992).
25. Ditmire, T., Smith, R. A., Tisch, J. W. G. & Hutchinson, M. H. R. Absorption of intense laser pulses by gases of atomic clusters. *Phys. Rev. Lett.* (submitted).
26. Ditmire, T., Gumbrell, E. T., Smith, R. A., Mountford, L. & Hutchinson, M. H. R. Supersonic ionization wave driven by radiation transport in a short-pulse laser-produced plasma. *Phys. Rev. Lett.* **77,** 498–501 (1996).
27. Rose, S. J. High-power laser-produced plasmas and astrophysics. *Laser Part. Beams* **9,** 869–880 (1991).
28. Lindl, J., McCrory, R. L. & Campbell, E. M. Progress toward ignition and burn propagation in inertial confinement fusion. *Phys. Today* **45,** 32–40 (1992).
29. Teller, E. *Fusion* 4–12 (Academic, New York, 1981).

Acknowledgements. We thank P. Ruthven for technical assistance and P. L. Knight for helpful conversations and advice.

Correspondence should be addressed to T.D. (e-mail: t.ditmire@ic.ac.uk).