INSTITUTE OF PHYSICS PUBLISHING JOURNAL OF PHYSICS B: ATOMIC, MOLECULAR AND OPTICAL PHYSICS

J. Phys. B: At. Mol. Opt. Phys. **36** (2003) 941–951 PII: S0953-4075(03)56540-3

# Penning trap mass measurements on rare isotopes—status and new developments

**Georg Bollen and Stefan Schwarz**

National Superconducting Cyclotron Laboratory, Michigan State University, East Lansing, MI 48824, USA

E-mail: bollen@nscl.msu.edu

Received 22 November 2002, in final form 14 January 2003
Published 24 February 2003
Online at stacks.iop.org/JPhysB/36/941

**Abstract**
Accurate masses of radioactive nuclides are important for a better understanding of nuclear structure, as input for the modelling of element synthesis in nuclear astrophysics and for fundamental tests of the weak interaction. Today, a variety of techniques exists for direct mass measurements of unstable nuclides. A very powerful approach is the employment of Penning traps. Penning trap mass spectrometry offers unprecedented accuracy, and is now applied to nuclides with half-lives well below a tenth of a second and produced only in minute quantities. This paper discusses specific aspects of Penning trap mass spectrometry on rare isotopes and gives an overview of on-going activities. This includes LEBIT, a new project at the National Superconducting Cyclotron Laboratory at Michigan State University.

## 1. Introduction

The development of new direct mass measurement techniques has provided tools for a detailed study of nuclear binding far from the valley of stability [1, 2]. Employing these tools for a systematic exploration of masses allows us to directly observe nuclear structure effects like the location of shell and subshell closures, pairing or the onset of deformation. Masses play an important role in the understanding of nuclear astrophysical processes. However, many important nuclei in these processes are still not accessible in the laboratory, and mass prediction by models and mass formula have to be employed [3, 4]. It is clear that new and accurate mass data far from stability are the most stringent tests for the predictive power of these models. For the general exploration of nuclear structure effects, an accuracy of 100 keV is often sufficient. In order to reveal more subtle effects, an accuracy in the order of 10 keV may be required. There are special cases where the mass measurement accuracy must go even further. This is, for example, the case for testing the standard model via a precise study of super-allowed $\beta$ emitters. Mass measurements with an accuracy of 1 keV or less of the parent and daughter nuclides of such transitions give stringent $Q$-values and complement nuclear spectroscopy measurements.

 © 2003 IOP Publishing Ltd Printed in the UK 

A variety of new techniques for the direct measurement of nuclear masses [1, 2] has been developed during the past two decades. Those that are presently in use are either based on time-of-flight or frequency measurements. Frequency measurements are carried out with storage rings, transmission spectrometers and Penning traps. The latter have proven to deliver unprecedented accuracy even for very exotic nuclides. In fact, the newest mass measurement projects for rare isotopes are all based on Penning traps. Compared to measurements on stable ions there are special requirements for Penning trap mass measurements on rare isotopes. They result from the facts that the ions are delivered by external sources, can have velocities approaching the speed of light, are often only produced in minute quantities and have very short half-lives.

## 2. Rare isotope Penning trap mass spectrometry (RI-PTMS)

In a Penning trap a strong homogeneous magnetic field with strength $B$ and an axial symmetric electric quadrupole field are employed for the storage of a charged particle [5]. In such a field configuration the ion performs a characteristic motion which is a superposition of three independent harmonic eigen motions. They are an axial motion with frequency $\nu_z$ (parallel to the magnetic field lines) and a radial motion. The radial motion itself is a superposition of a slow circular drift motion (magnetron motion) with frequency $\nu_-$ and a (reduced) cyclotron motion with the frequency $\nu_+ = \nu_c - \nu_-$, where

$$\nu_c = q/mB/(2\pi) \tag{1}$$

is the cyclotron frequency of an ion with a charge-to-mass ratio $q/m$ confined in a magnetic field $B$.

Several techniques have been developed for the detection of the frequencies of the eigenmotions of the ions and the cyclotron frequency. In most RI-PTMS experiments a direct observation of the sum of magnetron and reduced cyclotron frequencies $\nu_+ + \nu_- = \nu_c = q/mB/(2\pi)$ is used [6, 7]. From this sum frequency, the mass, $m$, of the ion can be obtained. The value of the magnetic field, $B$, required for the mass determination can be determined from the cyclotron frequency, $\nu_c$, of an ion with well known mass (preferably $^{12}$C, or carbon cluster ions).

The resolving power in Penning trap mass spectrometry depends on the time of observation, $T_{obs}$, of the ion motion. The line width, $\Delta\nu_c$ (FWHM), with which the cyclotron frequency can be determined is approximately given by [6]

$$\Delta\nu_c \approx 1/T_{obs}. \tag{2}$$

For the resolving power one obtains

$$R = \frac{m}{\Delta m} = \frac{\nu_c}{\Delta\nu_c} \approx 1\nu_c T_{obs}. \tag{3}$$

On one hand this means that the resolving power can be increased by enlarging the observation time of the ions. On the other hand it shows that the half-life of an nuclide poses a limit on the maximum resolving power that can be achieved.

The statistical uncertainty, $\delta m/m$, with which the cyclotron frequency can be determined is inversely proportional to both the resolving power, $R$, and to the square root of the number, $N_{ion}$, of detected ions. The former factor depends to some extent on the detection scheme in the experiment. An investigation of a large number of data obtained with ISOLTRAP showed that this factor is very close to unity, resulting in

$$(\delta m/m)_{stat} \approx 1R^{-1}N_{ion}^{-1/2}. \tag{4}$$

**Table 1.** RI-PTMS on various rare nuclides (see text).

| | $T_{1/2}$ | $T_{obs}$ | $\nu_c$ (MHz) | $R$ ($10^6$) | $N_{ion}$ | $\delta m/m$ | $\delta m$ (keV) |
|---|---|---|---|---|---|---|---|
| $^{19}$C | 46 ms | 92 ms | 7.6 | 0.7 | 200 | $1 \times 10^{-7}$ | 1.8 |
| $^{62}$Ga | 116 ms | 232 ms | 2.3 | 5.4 | 40 000 | $1 \times 10^{-8}$ | 0.5 |
| $^{131}$Sn | 56 s | 10 s | 1.1 | 11.0 | 100 | $1 \times 10^{-8}$ | 1.1 |
| $^{269}$Hs | 9 s | 2 s | 0.5 | 1.1 | 100 | $1 \times 10^{-7}$ | 23 |

Using the above relations, the accuracy and sensitivity of RI-PTMS can be evaluated for several scenarios. This is illustrated in table 1 for nuclides with different masses and half-lives. It is assumed that the maximum storage time is twice the half-life of the investigated nuclide. The magnetic field is taken to be 9.4 T, which corresponds to the field strength available in the LEBIT project[1] at Michigan State University (MSU). Case 1 ($^{19}$C) illustrates a measurement on a short-lived halo nucleus. It can be seen that with only 200 detected ions a statistical uncertainty of a few kiloelectronvolts can be achieved, sufficient to help understand the 'size' of the neutron halo. Case 2 describes the situation of a high-accuracy mass measurement on a short-lived nuclide like the super-allowed Fermi-emitter $^{62}$Ga. In order to achieve a statistical accuracy as required for a meaningful test of the conserved-vector-current (CVC) hypothesis several tens of thousands of ions will have to be detected. With enough beam intensity available, this can be achieved in less than a day of measurement time. Case 3 ($^{131}$Sn) describes the situation of a mid-mass nucleus important for shell model calculations. Because of the long half-life, a resolving power high enough to resolve the ground state and a long-lived isomeric state and to determine the excitation energy can be achieved. The last case illustrates the situation of a mass measurement of a superheavy nucleus. Of course, the total accuracy of the mass values has to include possible systematic errors. The design of present ion trap systems for nuclear mass measurements is such that systematic errors due to field imperfections are typically below $\delta m/m < 1 \times 10^{-8}$. Furthermore, frequent calibration measurements can ensure a similar uncertainty for the magnetic field strength determination. Some care has to be taken to avoid systematic errors due to Coulomb interaction between ions of different mass stored simultaneously [8]. Such effects can be avoided if the measurements are performed with only a single trapped ion at a time.

The ability to resolve nuclear isomeric and ground states is an important feature of RI-PTMS in particular for ensuring an accurate determination of ground state masses. Nearly one-third of the known nuclides have long-lived isomeric states with (in many cases unknown) excitation energies. Only in a few cases does information about the production ratio exist, which may vary drastically depending on the spins, the half-lives and on the parameters of rare nuclide production. Therefore, the resolution of nuclides in their ground or isomeric state is essential for an unambiguous determination of the mass of the nuclide in one or the other state (see for example [8, 9]).

## 3. Specific challenges in RI-PTMS

Penning traps have long since proven to be very accurate mass spectrometers. A large variety of mass measurements with an accuracy down to $10^{-10}$ have been performed on stable, mostly light particles (see for example [10–13]). In most of these experiments, the ions have been created inside the trap. For stable nuclides a high efficiency in ion production (and ion capture if performed at all) is not important and a fast measurement technique is not required. This is

[1] It should be noted that all other projects discussed in this paper use magnetic fields of 6–7 T.

different in the case of RI-PTMS, where two important challenges have to be met.

- The ions are delivered from external sources with high energy. Depending on the production schemes the total beam energy can range from several tens of kiloelectronvolts to several gigaelectronvolts. The most exotic (and most interesting) species are delivered in minute quantities of 100 ions $s^{-1}$ or even less. As a consequence, highly efficient schemes for slowing down the fast beams are required. Ion cooling and bunching is mandatory in order to be able to finally trap low-temperature ions.
- The half-life of the nuclide to be investigated will become shorter the farther one leaves the valley of beta stability. Typical values for nuclides very close to the neutron and proton drip lines are in the range of milliseconds to a few tens of milliseconds. This requires not only very fast techniques for beam handling and ion cooling but also a technique for determination of the cyclotron frequency that is adapted to the fact that the ions can only be stored for a short time.

### *3.1. Slowing down, cooling and capture of rare isotope beams*

An important parameter in RI-PTMS is the properties of the rare isotope beam. These properties are mostly determined by the production scheme.

In the case of the isotope separation on-line (ISOL) approach, normally a thick target of appropriate material and geometry is bombarded with energetic light ions, and rare nuclides are produced by various nuclear reactions. These products diffuse out of the targets, which are kept at high temperature, and eventually reach an ion source. They are ionized, accelerated to an energy of several tens of kiloelectronvolts, mass separated in a magnetic sector field and then delivered to the experiments. Examples for such facilities are ISOLDE at CERN [14] and ISAC at TRIUMF [15] in Vancouver. The advantages of ISOL facilities are their large production yields, in particular for nuclides closer to stability, and their good beam properties. Limitations exist in the selection of elements that can be produced and in decay losses due to the sometimes long release times from the target. A variation of the ISOL approach is IGISOL systems [16, 17], where heavy ions are impinging on thin targets. Recoiling reaction products are stopped in a small gas cell, re-ionized by laser light if required and extracted as low-energy ions that can then be mass separated. The yields are much lower compared to the scenario discussed above, but the technique is fast and there is essentially no limitation concerning the element that can be produced.

A different approach is based on in-flight separation of high-energy reaction products. Primary, medium- to heavy-ion beams are accelerated to energies ranging from MeV $u^{-1}$ to GeV $u^{-1}$, depending on the facility and the reactions aimed at. These primary ions hit thin targets where new nuclides are produced. The reaction products have a large forward momentum, which makes it possible to mass analyse and select them in flight in large magnetic separators. Such facilities are for example installed at the National Superconducting Cyclotron Laboratory (NSCL) at MSU and at the Gesellschaft für Schwerionenforschung (GSI) in Darmstadt. The advantage of this approach is its possibility to produce a very large number of isotopes of practically any element lighter than uranium and even superheavy elements via fusion–evaporation reactions as done with the velocity filter SHIP at GSI [18].

A major challenge in all production scenarios is the apparent mismatch between the beam properties (i.e. high energy, large emittance) and the requirements of trap-type experiments (i.e. cold ions confined in small volumes). ISOL beams are certainly the easiest to handle due to their low beam energy and their good beam quality. This is why ISOLTRAP, the pioneering experiment in this field, is installed at such a facility. But new projects have started to perform measurements of nuclides produced by in-flight separation.

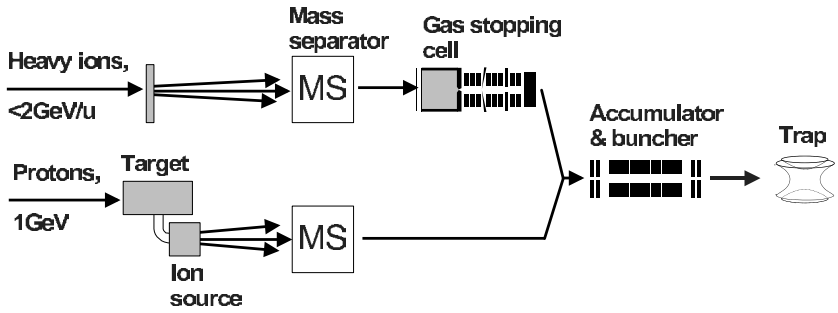


**Figure 1.** Beam preparation for RI-PTMS in the cases of rare isotope production via the ISOL approach and by in-flight separation

The basic principles adopted by all projects for the preparation of the rare isotope beams for their capture in ion traps is illustrated in figure 1. In the case of ISOL beams the ions are decelerated electrostatically to low energy before they enter a gas-filled (linear) radiofrequency (rf) ion trap. Here the ions are accumulated and cooled, and finally released as short, cooled ion bunches. This technique was pioneered at ISOLTRAP with the use of a large Paul trap [19]. In the case of high-energy in-flight separated beams electrostatic deceleration is not practical. Instead, a slowing down procedure is employed which is based on the usage of solid degraders and a stopping cell filled with helium at a pressure ranging from 0.1 to 1 bar. Different schemes are presently investigated for guiding the ions towards the exit nozzle of the stopping cell and for their final extraction.

### *3.2. Cyclotron frequency determination in RI-PTMS*

The most widely used technique for high-precision mass measurements relies on the observation of the image current induced by the oscillating ions in the trapping electrodes. Tuned circuits are used to achieve single-ion sensitivity. This technique is ideal if measurement time is not an issue and if masses do not have to be changed frequently.

For RI-PTMS a technique is required which is universal and fast and which allows widely different masses to be determined in short sequences. A time-of-flight resonance detection technique has turned out to be advantageous for this purpose. The principle is the following. An ion or an ion bunch is dynamically captured in the trap [20]. After some ion preparation an rf field is applied for a fixed time (=observation time, $T_{obs}$). Subsequently, the ion is ejected out of the trap and its time of flight to a detector outside the strong trapping field is measured. The trap is refilled and this procedure is repeated for different rf frequencies, $\nu_{rf}$. Due to an adiabatic conversion of the ions' radial energy into axial energy, a reduction of time of flight is measured if $\nu_{rf}$ corresponds to the ions' cyclotron frequency, $\nu_c$. Hence, measuring the time of flight as a function of $\nu_{rf}$ yields a resonance curve from which $\nu_c$ can be determined. The advantages of this destructive measurement technique for the study of rare nuclides are manifold. The technique does not require any tuning of resonant circuits and therefore allows for a very fast switching from one ion species to another. If a highly efficient ion detector is used, single-ion sensitivity can be achieved. Furthermore, the technique can in principle be made ultra-selective and essentially background free by combining the time-of-flight measurement with a particle identification via observation of the ions' nuclear decay.

## 4. PTMS projects at rare isotope beam facilities

### *4.1. ISOLTRAP*

ISOLTRAP [21] at ISOLDE/CERN was the first to demonstrate that Penning traps can also be applied with advantage to short-lived radioactive ions. The success of this experiment has triggered many more ion trap projects already installed or to be installed at rare isotope facilities. The ISOLTRAP spectrometer consists of three ion trap sub-systems. The first ion trap has the task of stopping the 60 keV ISOLDE beam and of preparing it for efficient transfer into the cooler trap. A radiofrequency quadrupole (RFQ) trap ion-beam buncher [22] is used for this purpose, which allows the capturing of the continuous 60 keV ISOLDE beam in flight. Short, cooled ion bunches are released and re-accelerated to an energy of about 1 keV by using a pulsed drift-tube technique. The second component is a buffer-gas filled Penning trap [23], which has the task of accumulating and purifying ions delivered by the RFQ-trap beam buncher. Isobar separation is achieved by using a mass selective buffer gas cooling technique [6, 7, 24]. The ions are then transported to a 6 T precision trap [25]. This is the actual mass spectrometer where the cyclotron frequency of the captured ions is determined. The accuracy limit of ISOLTRAP was investigated in detail, and found to be below 10 ppb [26].

More than 200 masses have been investigated with ISOLTRAP (see for example [9, 27–34]). Recent ISOLTRAP highlights are the determination of the masses of $^{74}$Rb, which has a half-life of only 65 ms, and of $^{34}$Ar, for which an accuracy of 400 eV was achieved [35, 36]. Both cases are of importance in connection of tests of the CVC hypothesis.

### *4.2. JYFLTRAP in Jyväskylä*

For several years the IGISOL technique [16] at the cyclotron laboratory in Jyväskylä has been providing low-energy ion beams for a rich physics programme. A recent step to further improve the beam quality of the IGISOL beams was the installation of an ion beam cooler and buncher, similar to the system used at ISOLTRAP. This beam buncher system is operational, and has recently been used in connection with laser spectroscopy studies [37]. A second important step in the JYFLTRAP project will be the installation of a tandem Penning trap system. This trap is planned to be used as an isobar separator, which will provide clean pulsed beams for the benefit of many experiments. The second Penning trap, which will be placed in a common 7 T magnet system, is planned to be used for precision mass measurements. The construction of the Penning trap is completed and its ability to act as an isobar separator has recently been demonstrated.

### *4.3. TITAN at TRIUMF/Vancouver*

TITAN at the ISAC facility at TRIUMF in Vancouver is the youngest project and at the time of writing still at the stage of a proposal. Its unique feature will be the coupling of an electron beam ion trap (EBIT) for charge breeding to a Penning trap mass spectrometer. The gain in cyclotron frequency will boost accuracy and increase the sensitivity. Given ISAC's very high production rates, the project has the potential to extend high-accuracy mass measurements to very short-lived nuclides far off stability.

### *4.4. CPT at ANL*

The Canadian Penning Trap, CPT [38, 39], is the first ion trap project that includes stopping of energetic radioactive products from nuclear reactions in a gas cell after in-flight separation.

Stable beam with an energy up to several ten MeV $u^{-1}$ from the ATLAS accelerator at Argonne National Laboratory is sent to appropriate targets placed at the entrance of an Enge split-pole magnet. Mass-separated reaction products are retarded and stopped in a high-pressure (100–200 mbar He) gas cell. Singly or doubly charged ions are extracted from this cell by combined static and rf electric fields. They are guided into a high-vacuum region by employing multi-stage differential pumping and RFQ systems, which act as an ion guide, accumulator and buncher. The ion bunches are then trapped in a Paul trap for further cooling and finally captured in a Penning trap ($B = 6$ T), where the mass measurement takes place. First results from CPT include measurements on neutron-deficient caesium isotopes [39] and on $^{68}$Se [40]. Furthermore, measurements were made on fission fragments produced by a fission source placed in front of the gas cell window [40].

### *4.5. SHIPTRAP at GSI and MAFFTRAP at LMU*

SHIPTRAP [41] is presently under construction and testing at GSI/Darmstadt and is installed at the velocity filter SHIP. The goal of the project is to set up a facility for the precise study of properties of transactinides and superheavies. In addition to mass measurements this may include at a later stage decay studies, laser spectroscopy and ion chemistry studies. The SHIP reaction products (typical energy, several MeV $u^{-1}$) will be converted into a low-energy high-quality pulsed beam using a concept very similar to the one applied in the CPT project at Argonne. The separated reaction products will be stopped in a gas cell [42], and also here RFQ ion guides will be used to guide, cool and bunch the beam. The ions will finally be sent into a tandem Penning trap mass spectrometer, where the first trap will be used for mass selective buffer gas cooling, and the second for the actual mass measurement. Both traps are placed in a single ($B = 7$ T) superconducting magnet system similar to JYFLTRAP. First stopping tests have been performed, and stable ions have been trapped.

A system very similar to SHIPTRAP is foreseen to be incorporated into the planned Munich Accelerator for Fission Fragments (MAFF) facility at the new research reactor FRM-II in Munich. MAFF will produce high-intensity neutron-rich radioactive with energies up to about 6 MeV $u^{-1}$. The experimental activities planned at MAFFTRAP [43] will focus on nuclear spectroscopy studies and nuclear mass measurements, including superheavy nuclei produced in fusion reactions.

## 5. PTMS with high-energy rare isotope beams—LEBIT at MSU

The only Penning trap project presently under construction for mass measurements on rare nuclides produced at energies above 100 MeV $u^{-1}$ is LEBIT at NSCL/MSU. The recently upgraded facility delivers a large range of nuclides with high intensities even very far from stability. Hence, it is ideally suited for a systematic exploration of nuclear binding energies of very exotic nuclei.

Figure 2 shows the layout of the LEBIT facility. As in the case of the medium-energy projects discussed above, the in-flight-separated reaction products are stopped in a gas cell after passing through appropriate degraders. The particular difficulty to be overcome is the high energy and the large energy spread of the reaction products, which either requires a very large gas stopping cell or a very high gas pressure. The latter option is presently pursued at the NSCL, and a 1 bar gas cell of 0.5 m length is used. A combination of DC electric fields, created by a set of focusing electrodes, and gas flow through a nozzle are employed to extract ions from the gas cell. RFQ ion-guide techniques combined with differential pumping are used to form a low-energy ion beam. The beam is then transported to a cryogenic ion cooler and

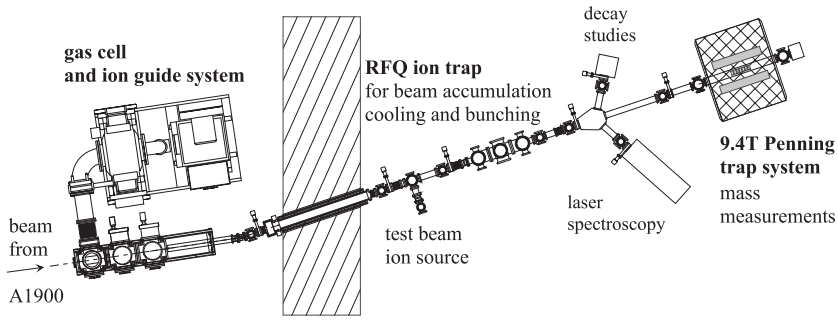


**Figure 2.** General layout of the LEBIT facility.

buncher, and subsequently to the experimental stations. The first experimental set-up will be a high-performance Penning trap mass spectrometer. The system is in the phase of advanced construction, and first measurements are planned in 2003. In the following the ion traps of LEBIT will be briefly discussed.

### *5.1. The RFQ ion beam buncher*

The ion accumulator and buncher in the LEBIT project is a linear Paul trap system, designed to accept the 5 keV DC beam from the gas cell and convert it into low-energy low-emittance pulsed beams. The electrode system of the LEBIT buncher is sketched in figure 3. The design differs considerably from that of conventional RFQ bunchers [44] as used in most other projects. The two functions of the device—cooling and bunching—are performed in separate sections. A high-pressure part ($p_{\mathrm{He}} \approx 1 \times 10^{-1}$ mbar) provides fast and efficient cooling whereas a low-pressure trapping region ($p_{\mathrm{He}} \leqslant 1 \times 10^{-3}$ mbar) allows the formation of ion bunches with low energy-spread and avoids reheating of ions during ejection. A miniature RFQ couples the two sections and provides differential pumping. Novel cylindrical wedge-type electrodes allow axial guiding fields to be created without the need for segmented rods. This scheme drastically reduces the number of electrodes and decouples the application of DC and RF voltages. Another innovative feature for this buncher is its operation at $LN_2$-temperature. Compared to a room-temperature system the emittance of the ejected ion bunches is expected to be reduced by a factor of $T_{room}/T_{LN_2} \approx 4$. Furthermore, the cold system will keep the buffer gas clean, which is essential to avoid problems due to charge-exchange reactions.

### *5.2. The 9.4 T Penning trap system*

A 9.4 T Penning trap system will be the first set-up in the experimental area of the LEBIT facility. Figure 4 shows a sketch of the beam-line including the Penning trap system. LEBIT uses a high-performance 9.4 T magnet with 5 inch room-temperature bore manufactured by Cryomagnetics. The system was recently installed and energized. The standard design of this actively shielded magnet has been upgraded with an additional external-field compensation coil as invented by G Gabrielse several years ago [45] and used for the antiproton mass measurements at CERN. Such a measure is of great advantage for high-precision measurements in an accelerator environment where the ambient field can change frequently. The LEBIT magnet system has been measured to reduce the effect of external field changes by a factor of 250.

For the mass measurements, a compensated hyperbolic trap similar to that of ISOLTRAP will be used. The construction of the Penning trap electrode system with minimized magnetic

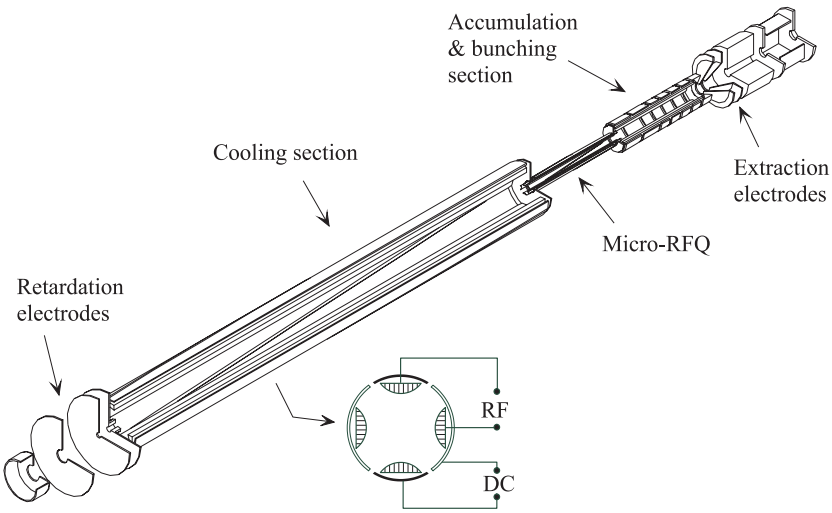


**Figure 3.** Electrode system of the LEBIT ion beam buncher.

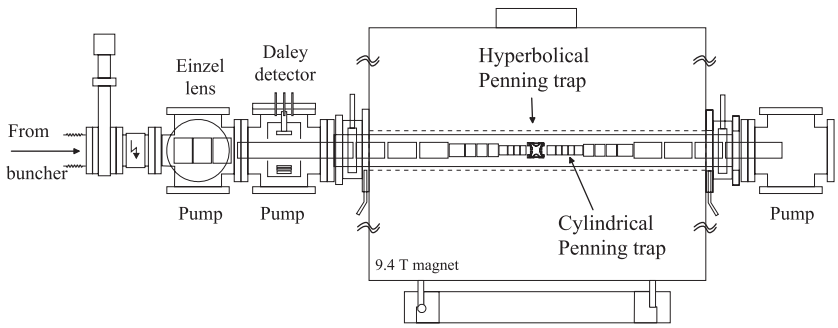


**Figure 4.** Schematic layout of the LEBIT Penning trap section.

field distortion and optimized electric field is another prerequisite. A trap design will be used for LEBIT that is similar to the one used for ISOLTRAP and SMILETRAP [25]. A careful re-analysis of these largely identical systems confirmed their excellent electric field properties, but also showed that magnetic field distortions can still be minimized. A general-purpose cylindrical trap for ion 'parking' and decay studies will follow the hyperbolic trap. Both traps will be operated at 80 K temperature. The main reason is to achieve an excellent vacuum inside the traps, which is essential for achieving highest resolving powers and for avoiding charge exchange in the case of long storage times. For the time-of-flight resonance detection scheme, a concept is presently being studied in which the ion detector is foreseen to be installed in the beam-line coming from the buncher. This will give free access to the traps from the rear end and will e.g. allow mass measurements to be combined with nuclear spectroscopy.

## 6. Conclusion

Penning trap spectrometers have become the favoured device for high-accuracy mass measurements of very short-lived nuclides. New developments and efforts in the manipulation of rare isotope beams by gas-stopping and trapping techniques have extended the applicability

of Penning trap mass spectrometry from ISOL-type beams to fast rare isotope beams. Present and upcoming projects can be expected to provide accurate mass values for many new rare nuclides and to drastically improve those already known. This will contribute to a better understanding of nuclear structure, nuclear astrophysical processes and fundamental interactions.

## References


[1] Bollen G 1997 *Nucl. Phys.* A **626** 297c
[2] Mittig W, Lépine-Szily A and Orr N A 1997 *Annu. Rev. Nucl. Sci.* **47** 27
[3] Goriely S and Arnould M 1996 *Astron. Astrophys.* **312** 327
[4] Kratz K-L *et al* 1993 *Astrophys. J.* **403** 2161 and this volume
[5] Brown L S and Gabrielse G 1986 *Rev. Mod. Phys.* **58** 233
[6] Bollen G *et al* 1990 *J. Appl. Phys.* **68** 4355
[7] König M *et al* 1995 *Int. J. Mass Spectrom. Ion Process.* **142** 95
[8] Bollen G *et al* 1992 *Phys. Rev.* C **46** R2140
[9] Schwarz S *et al* 2001 *Nucl. Phys.* A **693** 533
[10] 1995 *Proc. Nobel Symp. 91 on Trapped Charged Particles and Related Fundamental Physics (Lysekil, Sweden, 1994); Phys. Scr.* T **59**
[11] 1999 *Proc. Int. Conf. on Trapped Charged Particles and Fundamental Physics (Asilomar, CA, 1998); AIP Conf. Proc.* **457** 111
[12] Bradley M P *et al* 1999 *Phys. Rev. Lett.* **83** 4510
[13] Carlberg C 1999 *Phys. Rev. Lett.* **83** 4506
[14] Kugler E 2002 *Hyperfine Interact.* **129** 23
[15] Dombsky M *et al* 2002 *Nucl. Phys.* A **701** 486c
[16] Penttilä H *et al* 1997 *Nucl. Instrum. Methods* B **126** 213
[17] Kudryavtsev Y *et al* 2002 *Nucl. Phys.* A **701** 465c
[18] Münzenberg G *et al* 1979 *Nucl. Instrum. Methods* **161** 65
[19] Ghalambor-Dezfuli *et al* 2002 *Rev. Sci. Instrum.* **73** 685
[20] Schnatz H *et al* 1986 *Nucl. Instrum. Methods* A **251** 17
[21] Bollen G *et al* 1996 *Nucl. Instrum. Methods* A **368** 675
[22] Herfurth F *et al* 2001 *Nucl. Instrum. Methods* A **469** 254
[23] Raimbault-Hartmann H *et al* 1997 *Nucl. Instrum. Methods* B **126** 374
[24] Savard G *et al* 1991 *Phys. Lett.* A **158** 247
[25] Becker S *et al* 1990 *Int. J. Mass Spectrom. Ion Process.* **99** 53
[26] Kellerbauer A *et al* 2003 *Eur. Phys. J* D at press, available as Kellerbauer A *et al* 2002 *CERN Preprint* CERN-EP/2002-047
[27] Stolzenberg H *et al* 1990 *Phys. Rev. Lett.* **65** 3104
[28] Bollen G *et al* 1992 *J. Mod. Opt.* **39** 257
[29] Otto T *et al* 1994 *Nucl. Phys.* A **567** 281
[30] Beck D *et al* 1997 *Nucl. Phys.* A **626** 343c
[31] Ames F *et al* 1999 *Nucl. Phys.* A **651** 3
[32] Beck D *et al* 2000 *Eur. Phys. J* A **8** 307
[33] Dilling J *et al* 2002 *Nucl. Phys.* A **701** 520
[34] Herfurth F *et al* 2001 *Phys. Rev. Lett.* **87** 142501
[35] Herfurth F *et al* 2001 *Proc. Int. Conf. on Exotic Nuclei and Atomic Masses, ENAM 2001 (Hämeenlinna, Finland, 2001)*
[36] Herfurth F *et al* 2003 *Trapped Charged Particles and Fundamental Interactions (Wildbad Kreuth, Germany, 2002)* section 2 *J. Phys. B: At. Mol. Opt. Phys.* **36** 931
[37] Billowes J 2001 *Nucl. Phys.* A **682** 206c
[38] Sharma K S *et al* 1998 *Proc. Int. Conf. on Exotic Nuclei and Atomic Masses, ENAM'98 (Shanty Creek, 1998)* (New York: American Institute of Physics) p 103
[39] Savard G *et al* 2001 *Hyperfine Interact.* **132** 223
[40] Savard G 2002 *APS Fall Mtg Div. Nucl. Phys. (Bull. APS, Series II vol 47)*
[41] Dilling J 2000 *Hyperfine Interact.* **127** 491
[42] Engels O *et al Hyperfine Interact.* **132** 505

[43] Szerypo J *et al* 2002 *Proc. Conf. on Electromagnetic Isotope Separators and Techniques Related to their Applications, EMIS 14 (Victoria, Canada, 2002)*
[44] Äystö J *et al* 2003 *Trapped Charged Particles and Fundamental Interactions (Wildbad Kreuth, Germany, 2002)* section 1 *J. Phys. B: At. Mol. Opt. Phys.* **36** 573
[45] Gabrielse G and Tan J 1988 *J. Appl. Phys.* **63** 5143