Available online at www.sciencedirect.com
SCIENCE DIRECT®
Nuclear Instruments and Methods in Physics Research A 507 (2003) 541–546
NUCLEAR INSTRUMENTS & METHODS IN PHYSICS RESEARCH Section A
www.elsevier.com/locate/nima

# Ultrasensitive spectroscopy of ionic reactive intermediates in the gas phase performed with the first coupling of an IR FEL with an FTICR-MS

Philippe Maître[a,*], Sophie Le Caër[a], Aude Simon[a], William Jones[a], Joël Lemaire[a], Hélène Mestdagh[a], Michel Heninger[a], Gérard Mauclaire[a], Pierre Boissel[a], Rui Prazeres[b], François Glotin[b], Jean-Michel Ortega[b]

[a] *Laboratoire de Chimie Physique (CNRS-UMR-8000), Université de Paris XI, Bâtiment 350, Orsay Cedex 91405, France*
[b] *CLIO-LURE, Université de Paris XI, Bâtiment 209D, BP 34, Orsay Cedex 91898, France*

**Abstract**

First example of coupling a Fourier Transform Ion Cyclotron Resonance Mass Spectrometer (FTICR-MS) with an infrared Free Electron Laser (FEL) is presented. This experimental setup is ideally suited for the direct structural characterization of reactive polyatomic ions. Ultrasensitive measurements of the infrared vibrational spectrum of ionic reactive intermediate selectively prepared is allowed by the association of the high peak power of the FEL, its wide tunability, and the flexibility of FTICR-MS, where several mass selections and ion-molecule reactions can be combined. These possibilities are demonstrated in the case of $Fe^+$ complexes where two photofragmentation pathways compete. The resulting infrared spectrum is in excellent agreement, both with respect to the position and to the relative intensities of the infrared transitions, with predicted by ab initio electronic structure calculations.
© 2003 Elsevier Science B.V. All rights reserved.

*PACS:* 26.20.Ng; 42.62; 33.20.t; 82.80.Q

*Keywords:* IR-FEL, ICR Mass Spectrometry, IR Spectroscopy, Photodissociation, Multiphoton, Gas Phase Ion Chemistry

## 1. Introduction

Gas phase study of mass selected ions is not only interesting on its own, but it also provides information on the intrinsic properties of molecular ions that can give valuable hints to the understanding of chemistry in the condensed phase [1]. Fourier Transform Ion Cyclotron Resonance (FTICR) mass spectrometers [2] are ideally suited for the study of ion-molecule reactions, and elementary reactions can be probed under well-defined conditions. A simultaneous detection of all the ions, trapped in combined magnetic and electric fields, is allowed by monitoring the image current induced on the plates of the trap by their characteristic cyclotron frequency. One of the great advantages of FTICR over other MS techniques relies on its high mass resolution. Ions formed by a variety of techniques [3] are produced in the FTICR cell where they eventually undergo ion-molecule reactions with

*Corresponding author. Fax: +33-1-69-15-61-88.
*E-mail address:* maitre@lcp.u-psud.fr (P. Maître).

0168-9002/03/$ - see front matter © 2003 Elsevier Science B.V. All rights reserved.
doi:10.1016/S0168-9002(03)00914-8

neutral compounds at pressure typically ranging within $10^{-6}$–$10^{-8}$ Torr. Double resonance techniques, which allow for the identification of all the ions involved in the formation of a particular product ion, are of special interest to determine the reactive intermediates of a chemical path. Structural information can also be obtained, but rather indirectly [4]. This can be achieved, for instance, by the analysis of the fragmentation obtained by collision induced dissociation (CID) of a specifically accelerated ion with a stationary target gas.

Infrared spectroscopy under FTICR conditions would singularly improve our understanding of the selectively prepared molecular ions. Whereas absorption spectroscopy has been realized under plasma conditions allowing for ion column densities as high as $10^{16}\,cm^{-2}$ [5], it is not feasible in FTICR traps where ions are typically confined to the mm scale, at densities lower than $10^{8}\,cm^{-3}$. Alternatively, infrared absorption can be indirectly probed by monitoring InfraRed MultiPhoton Dissociation (IRMPD), with an intense laser. With this respect, infrared Free Electron Lasers (FEL) are particularly well suited since they provide both high peak power and wide tunability. IR spectroscopy of several molecular ions has recently been achieved, but no example of spectroscopy on reaction product has been reported in these experiments performed in a RF ion trap [6–9]. More importantly, the low mass resolution prevents the characterization of light neutral fragments of the IRMPD process, such as H or $H_2$. Therefore, FTICR would be an interesting alternative to trap the ions. IRMPD induced by continuous wave $CO_2$ laser radiation under FTICR conditions has been first evidenced as early as 1978 by Beauchamp and co-workers [10]. Nevertheless, as far as organometallic chemistry is concerned, subsequent studies of Freiser's group, for example, [11] were severely limited by the wavelength range accessible.

In this paper we present the first coupling of an FTICR-MS with an infrared FEL, thus allowing the infrared spectroscopy of selectively prepared molecular ions. This experiment opens the way to the direct characterization of reactive intermediates and the performances of the experimental set-up will be illustrated on the case of gas phase organometallic chemistry with $Fe^{+}$ complexes.

## 2. Experiments

### 2.1. FTICR Mass Spectrometer

MICRA, a compact, rugged and easily transportable FTICR prototype used in this work [12] is especially well suited for periodic coupling to a FEL machine such as CLIO, where users'space and accessibility are restricted. Based on a 1.25 T permanent magnet MICRA avoids all constraints linked to cryogenic superconducting magnets in normally available FTICR machines, whilst preserving a mass resolution $m/\Delta m$ better than 73,000 at mass 132.

Fig. 1 represents the ion trap located inside a cylindrical vacuum chamber (1) fitting into the 5 cm diameter bore of the magnet (3). The trap

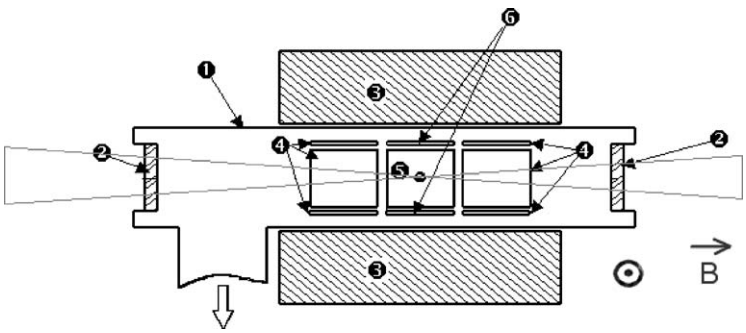


Fig. 1. Schematic cutaway view of the experimental setup: (1) vacuum chamber, (2) ZnSe optical windows, (3) permanent magnet, (4) excitation plates, (5) trapping plates, with electron beam shown in the middle, (6) detection plates.

differs from the usual cubic FTICR cell by its open structure: rather than using grids, two opposite side electrodes are replaced by sets of four interconnected electrodes (4) so that the IR beam passing through a ZnSe vacuum window (2) can cross the trap without interfering with surfaces. Primary ions are generated in the cell by electron impact on neutral species admitted through pulsed valves. Co-linear with the magnetic field, the electron beam is then guided, as well as the resulting ions formed, into a 0.8 mm diameter cylinder. Ions are trapped by the magnetic field in the plane perpendicular to it. Applying a repulsive electrical potential on the trapping plates (5), with all other electrodes remaining at ground potential, creates an electrostatic potential well, constraining the ions' motion in the direction of the magnetic field. In the first approximation, the ion motion is the combination of circular motion with a cyclotron angular frequency proportional to their mass to charge ratio, and of an oscillation in the electrostatic trapping well.

Resonant excitation of the ion's cyclotron motion is obtained by applying the corresponding RF field between the two sets of side electrodes (4). Coherently excited ions orbiting between the remaining set of electrodes (6), called detection plates, induce a signal which is amplified, digitized, and Fourier transformed.

A base pressure of the order of $5 \times 10^{-9}$ Torr is obtained by pumping with a $70\,\mathrm{L\,s^{-1}}$ turbomolecular pump, backed by a dry membrane pump. Three pulsed gas inlets combining three way pulsed valves and fine metering valves, allow very reproducible and easily characterized gas pulses, with a pumping down time of the order of 0.4 s.

### 2.2. FEL

This particular infrared spectroscopy requires a high peak power, relatively small bandwidth and easy tunability of the source. These characteristics can be found at the CLIO infrared FEL facility. The FEL CLIO at Orsay [13] is based on a 10–50 MeV electron accelerator and has a very large wavelength range in the infrared (from 3 to 75 μm). Continuous tunability is obtained over a spectral range $\Delta\lambda/\lambda \cong 2.5$. The limits of the range can be chosen by the users. Covering a larger spectral interval requires to perform successive measurements at different energies of the machine, which was not required in our case. The FEL relative bandwidth is typically 0.3% when the optical cavity is tuned in order to minimize it (at the expense of the peak power). The time necessary to make a step from one to a nearby wavelength is less than 1 s. Therefore, the duration needed to make a spectrum is essentially constrained by the time necessary to record the data at each step. The FEL temporal structure consists of trains of "macropulses" at a repetition rate of 25 Hz. This train is about 8 μs long and contains 500 "micropulses" a few picoseconds long each. Under these conditions the typical peak power (and energy) delivered during the micropulse and macropulse are, respectively, 20 MW (50 μJ) and 3 kW (25 mJ). The pulse to pulse reproducibility is a few percent and can be monitored easily with a detector.

As said in the previous section, the ions produced by electron impact are formed in a cylindrical volume, and oscillate in the electrostatic well produced by the two trapping plates at a 2 V potential. The resulting trapping motion along the magnetic field direction is efficiently dumped by collisions, and ions are thus confined within approximately one $mm^3$. The beam was focused in the FT-ICR to a waist of approximately 400 μm at $\lambda = 10\,\mu m$. This focalization conditions was found to optimize the photofragmentation rate of several ions which have been studied. This seems to indicate that the laser power density is quite important to efficiently achieve IRMPD.

### 2.3. DFT methods used for deriving infrared spectra

The hybrid density functional method B3LYP [14], has been used to determine the infrared spectrum of the species of interest. Calculations were performed using, for the ligands, polarised double-zeta basis set [15] as implemented in the Gaussian98 package [16]. The iron atom was described by the extended wachter basis set (14s11p6d3f)/(8s6p4d1f) [17]. A scaling factor of 0.98, determined by comparing the calculated and experimental infrared lines of the ligand, was applied on the raw harmonic infrared transition

energy of the metal-ligand. Furthermore, in order to take into account the broadening of each infrared line observed experimentally, each of them was convoluted by a lorentzian profile of $50\,cm^{-1}$ fwhm.

## 3. Infrared spectroscopy of gas phase organometallic ions

### 3.1. Introduction

The potential of FTICR studies for gas phase organometallic chemistry had been realized earlier on [18], and several reviews have been published on this subject [19]. Transition metal containing ions in the gas phase offer the opportunity to probe the intrinsic chemical and physical properties of these species in the absence of complicating factors such as solvation and ion-pair effects. This work provides important clues on the elementary steps associated to the activation process of molecules by homogeneous or heterogeneous catalysts. With this respect, insights into the role of the electronic structure of the metals on the activation and functionalization processes of methane activation has been gained [1], for example. Infrared spectroscopy of reactive intermediates associated to the activation of methane by third-row transition metals is under study in our group [20].

We will discuss here results related to the gas phase chemistry of cationic iron complexes. In order to clarify the dependence of the reactivity with ligation state, successive reactions of mass selected $Fe(CO)_n^+$ ($n = 1-5$) with oxygen-containing ligands have been studied [21–24]. Besides ligand exchange reactions, C–O activation has been shown to take place. In the case of dimethylether (DME), two reaction pathways are observed [24]: either a simple direct cleavage of the O–$CH_3$ bond or through a more complex rearrangement as evidenced by the reaction products of $Fe(DME)^+$ with DME, corresponding to $CH_3^{\cdot}$ and $CH_4$ loss respectively. In this connexion, study of the IRMPD photodissociation of $Fe(DME)_2^+$ is highly interesting.

### 3.2. Results and discussion

$Fe(DME)_2^+$ ions, mass selected after reaction for 1 s of mass-selected $Fe(CO)_2^+$ ions with DME pulsed for 100 ms under a pressure of $10^{-6}$ Torr, have been irradiated for 1 s with photons of wavelength ranging from 800 to $1600\,cm^{-1}$. Specific wavelength fragmentations were observed, and the infrared spectrum is derived from the relative abundance of the fragment ions, the most abundant being characterised by $m/z = 132$ ion corresponding to $CH_4$ loss. In Fig. 2, we give the infrared spectrum of $Fe(DME)_2^+$. Two strong bands at low energy (852 and $1015\,cm^{-1}$) and weaker bands at higher energies (1155, 1258, and $1458\,cm^{-1}$) have been measured. It should be noted that the bands are much broader than the laser bandwidth. It has been shown that the broadening of the infrared bands essentially arises from the dynamics of the multiphoton excitation. In particular, von Helden et al. [25] have shown that the multiphoton excitation process is more efficient when the IR radiation is chirped towards lower frequencies during the excitation process.

In Fig. 2, calculated infrared spectrum is also given along with the corresponding optimized structure. Interestingly, despite the quite complicated character of the IRMPD, there is a remarkable agreement between the experiment and

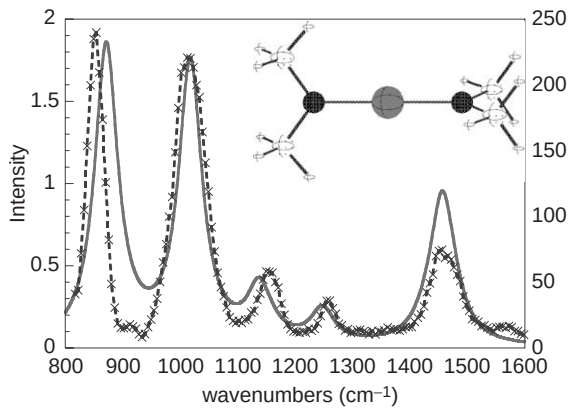


Fig. 2. Experimental (full line) and theoretical (dashed line) infrared spectra of $Fe(DME)_2^+$. The experimental intensity is defined as the fragmentation efficiency, $E = -\ln(I_{148})$ where $I_{148}$ is the relative intensity of the parent ion.

theory regarding both the positions and relative intensities of the infrared transitions, which are listed in Table 1.

The infrared spectrum given in Fig. 2 has been recorded using an average laser power of 600–800 mW, depending on the wavelength. In Fig. 3, we report the infrared spectra of $Fe(DME)_2^+$ recorded at different laser powers, using a set of attenuators. As can be seen on this figure, the weak bands disappear when the laser power is divided by three, and only the two most intense transitions at 852 and 1015 $cm^{-1}$ can be observed, when the laser power is divided by nine (two attenuators in Fig. 3).

Fig. 4 shows the nature and wavelength dependence of the different fragmentation products. Besides the major fragment $Fe(DME)(CH_2O)^+$ ($m/z = 132$), ions $Fe(DME)(CH_3O)^+$ ($m/z = 133$) and $Fe(CH_2O)_2^+$ ($m/z = 116$) are also detected, along with a trace of $FeCH_2O^+$ ($m/z = 86$). From previous studies, [26] it is reasonable to assume that a sequential photofragmentation occurs from $m/z = 132$ as depicted in Scheme 1. This is supported by the fact that the

Table 1
Position and relative intensities of the experimental and theoretical infrared spectra of $Fe(DME)_2^+$

| Vibration | $\nu(I_{rel})$ | |
|---|---|---|
| | Calculate | Experim. |
| $CH_2$ twist. (e) | 1454 (1.00) | 1458 (1.00) |
| $CH_3$ rock. ($b_2$) | 1248 (0.94) | 1258 (0.93) |
| $CH_3$ rock. (e) | 1137 (0.19) | 1155 (0.24) |
| C–O asym. str. (e) | 1017 (0.12) | 1015 (0.15) |
| As. Str. Fe–O ($b_2$) | 871 (0.48) | 852 (0.31) |

A description of each normal mode and its symmetry in the $D_{2d}$ point group of the optimal structure (in parentheses) is given in the first column.

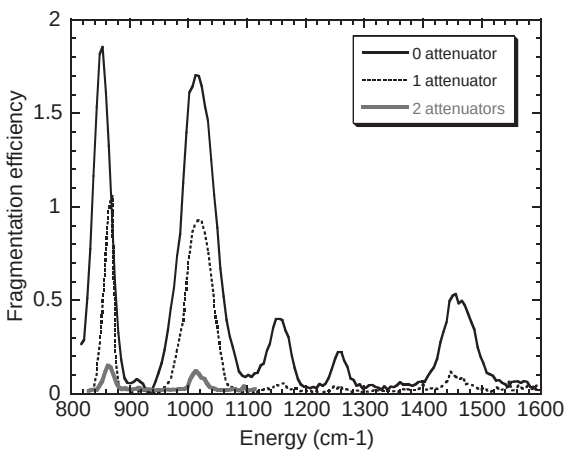


Fig. 3. Influence of the laser power on the fragmentation efficiency of $Fe(DME)_2^+$. Each attenuator divides the laser power by three. The fragmentation efficiencies are corrected from background fragmentation.

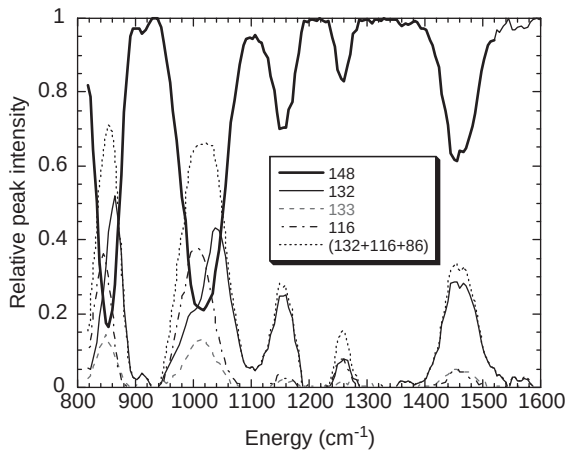


Fig. 4. Photofragmentation of $Fe(DME)_2^+$: relative abundance of each fragment ion.

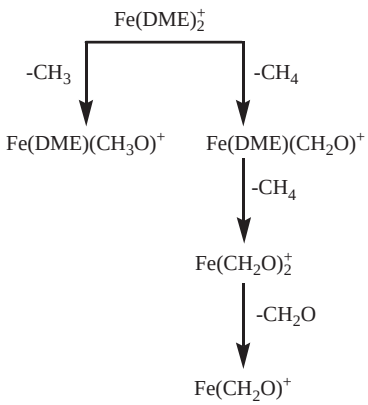


Scheme 1.

sum of $m/z = 132$, 116 and 86 ions nicely follows the shape of the spectrum (Fig. 4). The corresponding branching channel, i.e. abundance ratio $(132+116+86)/133$ remains equal to 7–8 for the different peaks using either 0 or 1 attenuator. This confirms that the two C–O cleavages leading to $m/z = 132$ and 133 ions occur concurrently, in particular $m/z = 132$ cannot arise from $m/z = 133$.

The efficient fragmentation of ions at their absorption wavelengths could be interpreted as follows. IRMPD is believed as being a slow heating process of the molecular ions. That is, the time scale for the intramolecular vibrational redistribution (IVR) energy being typically of the order of few ps [27], the absorbed photon energy is statistically redistributed over all the vibrations. Therefore, the molecular ion thoroughly explores the potential energy surface until the internal energy is sufficient to find the lowest fragmentation channel, the other photofragments being thus the result of a sequential photofragmentation. Interestingly, in the present case, two photofragmentations are in competition. According to this energy redistribution model the barriers for both channels are likely to be close in energy and the branching ratio is expected to be roughly independent of laser wavelength and power, as experimentally observed.

## 5. Concluding remarks

This first example of coupling of an IR-FEL with an FTICR-MS demonstrates the feasibility to perform infrared spectroscopy on ions selectively prepared under ICR conditions. The experimental infrared spectrum of $Fe(DME)_2^+$, recorded over the 800–1600 $cm^{-1}$ range, is in excellent agreement with the harmonic vibrational spectrum obtained at a DFT level, this both in terms of wavelength and relative intensities. When the laser power is attenuated however, only the most intense transitions can be observed. Two competitive photofragmentation channels are evidenced. Methane loss could be related to the recent proposition for a "two states reactivity" [28,29]. Interestingly, we show that the corresponding branching ratio is independent of the laser power and wavelength.

The present experimental setup, coupling an IR-FEL and an FTICR-MS, is the ideal means to get direct structural information on very reactive intermediates, thus improving the interest in FTICR-MS for fundamental chemical studies.

## References

[1] H. Schwarz, D. Schroder, Pure Appl. Chem. 72 (2000) 2319.
[2] A.G. Marshall, Int. J. Mass Spectrom. 200 (2000) 331.
[3] M.L. Vestal, Chem. Rev. 101 (2001) 361.
[4] K.M. Ervin, Chem. Rev. 101 (2001) 391.
[5] R.J. Saykally, Science 239 (1988) 157.
[6] J. Oomens, et al., Astrophys. J. 542 (2000) 404.
[7] J. Oomens, et al., J. Phys. Chem. A 105 (2001) 8302.
[8] J. Oomens, et al., Astrophys. J. 560 (1 Part 2) (2001) L99.
[9] D. van Heijnsbergen, et al., J. Am. Chem. Soc. 124 (2002) 1562.
[10] R.L. Woodin, et al., J. Am. Chem. Soc. 100 (1978) 3248.
[11] P.I. Surya, et al., J. Am. Chem. Soc. 118 (1996) 1118.
[12] G. Bellec, et al., CNRS Patent no. 0201867 pending, February 14, 2002.
[13] R. Prazeres, et al., Eur. Phys. J. D 3 (1998) 87.
[14] A.D. Becke, J. Chem. Phys. 98 (1993) 5648.
[15] P.J. Hay, J. Chem. Phys. 66 (1977) 4377.
[16] G.W.T.M.J. Frisch, et al., GAUSSIAN 98 Gaussian, Inc. Pittsburgh, 1998 (1995).
[17] www.emsl.pnl.gov
[18] M.S. Foster, J.L. Beauchamp, J. Am. Chem. Soc. 93 (1971) 4924.
[19] B.S. Freiser (Ed.), Organometallic Ion Chemistry, Kluwer, Dordrecht, 1996.
[20] A. Simon, et al., J. Chem. Phys. 115 (2001) 2510.
[21] M. Heninger, et al., Int. J. Mass Spectrom. 199 (2000) 267.
[22] M. Heninger, et al., Chem. Phys. Lett. 333 (2001) 358.
[23] S. Le Caër, et al., Chem. Phys. Lett. 352 (2002) 393.
[24] S. Le Caër, et al., Phys. Chem. Chem. Phys. 4 (2002) 1855.
[25] G. von Helden, et al., Opt. Express 4 (1999) 46.
[26] J. Lemaire, et al., Phys. Rev. Lett. 89 (2002) 273002.
[27] J. Black, et al., Phys. Rev. Lett 38 (1977) 1131.
[28] S. Shaik, et al., Helv. Chim. Acta 78 (1995) 1393.
[29] D. Schröder, et al., Acc. Chem. Res. 33 (2000) 139.